177RG Cardinal



CESSNA

MORE PEOPLE BUY AND FLY CESSNA AIRPLANES THAN ANY OTHER MAKE

1971

WORLD'S LARGEST PRODUCER OF GENERAL AVIATION AIRCRAFT SINCE 1956

MODEL 177 AND CARDINAL

OWNER'S MANUAL

AEROCCIDENTE
Escuela de Aviación

TABLE OF CONTENTS

SECTION

GENERAL 1

LIMITATIONS 2

EMERGENCY PROCEDURES 3

NORMAL PROCEDURES 4

PERFORMANCE 5

WEIGHT & BALANCE/
EQUIPMENT LIST 6

AIRPLANE & SYSTEMS
DESCRIPTIONS 7

AIRPLANE HANDLING,
SERVICE & MAINTENANCE 8

SUPPLEMENTS
(Optional Systems Description
& Operating Procedures) 9

AEROCCIDENTE
Escuela de Aviación

SECTION 1
GENERAL

TABLE OF CONTENTS

	Page
Three View	1-2
Introduction	1-3
Descriptive Data	1-3
Engine	1-3
Propeller	1-3
Fuel	1-3
Oil	1-4
Maximum Certificated Weights	1-4
Standard Airplane Weights	1-5
Cabin and Entry Dimensions	1-5
Baggage Space and Entry Dimensions	1-5
Specific Loadings	1-5
Symbols, Abbreviations and Terminology	1-5
General Airspeed Terminology and Symbols	1-5
Meteorological Terminology	1-6
Engine Power Terminology	1-7
Airplane Performance and Flight Planning Terminology	1-7
Weight and Balance Terminology	1-7

AEROCCIDENTE
Escuela de Aviación

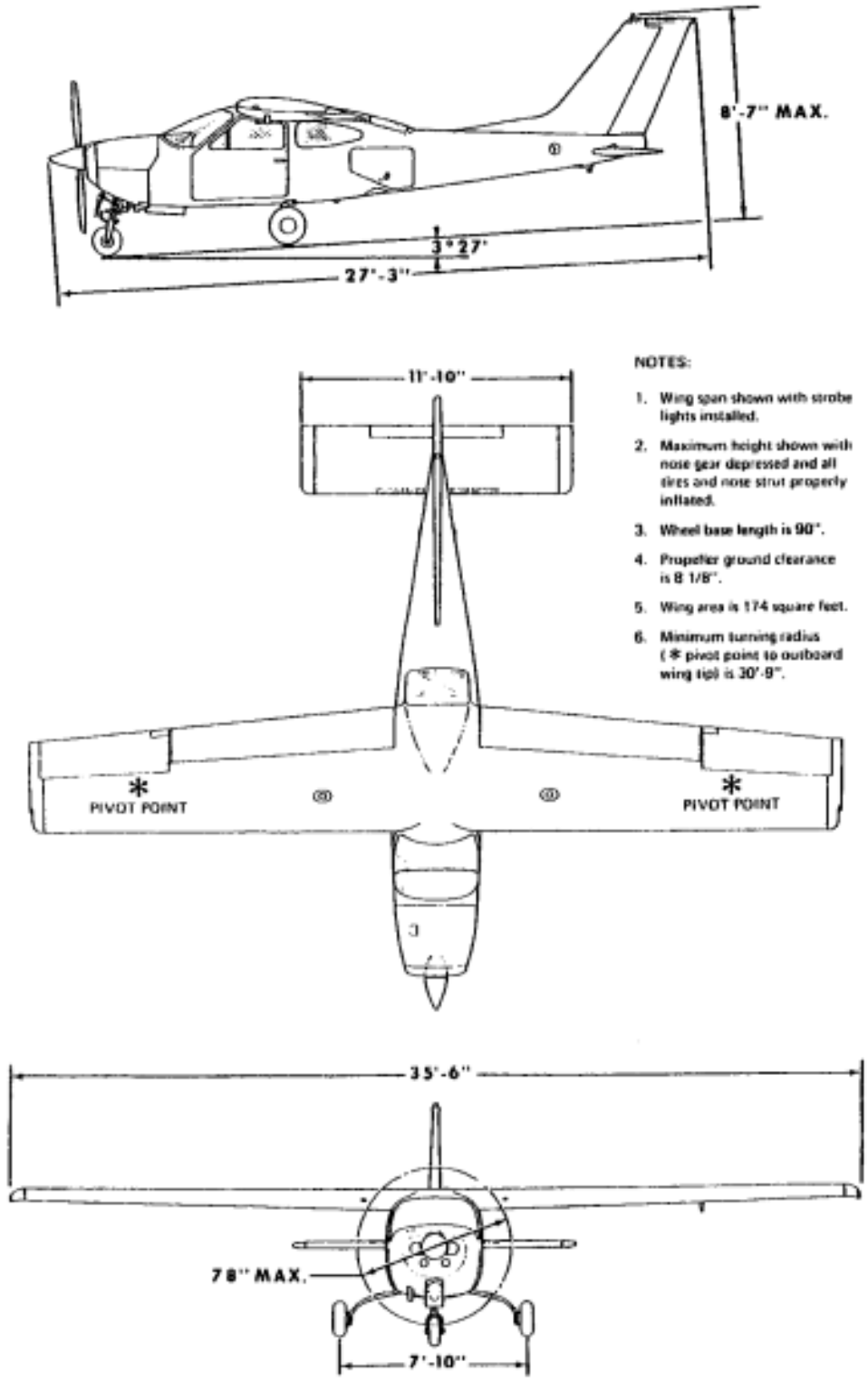

Figure 1-1. Three View

INTRODUCTION

This handbook contains 9 sections, and includes the material required to be furnished to the pilot by FAR Part 23. It also contains supplemental data supplied by Cessna Aircraft Company.

Section 1 provides basic data and information of general interest. It also contains definitions or explanations of symbols, abbreviations, and terminology commonly used.

DESCRIPTIVE DATA

ENGINE

Number of Engines: 1.
Engine Manufacturer: Avco Lycoming.
Engine Model Number: IO-360-A1B6D.
Engine Type: Normally-aspirated, direct-drive, air-cooled, horizontally-opposed, fuel-injected, four-cylinder engine with 361 cu. in. displacement.
Horsepower Rating and Engine Speed: 200 rated BHP at 2700 RPM.

PROPELLER

Propeller Manufacturer: McCauley Accessory Division.
Propeller Model Number: B2D34C207/78TCA-0.
Number of Blades: 2.
Propeller Diameter, Maximum: 78 inches.
Minimum: 76.5 inches.
Propeller Type: Constant speed and hydraulically actuated, with a low pitch setting of 12.9° and a high pitch setting of 27.5° (30 inch station).

FUEL

Fuel Grade (and Color): 100/130 Minimum Grade Aviation Fuel (green). 100/130 low lead aviation fuel (blue) with a lead content limited to 2 cc per gallon is also approved.
Total Capacity: 51 gallons.
Total Capacity Each Tank: 25.5 gallons.
Total Usable: 50 gallons.

NOTE

To ensure desired fuel capacity when refueling, place

AEROCCIDENTE
Escuela de Aviación

the fuel selector valve in either LEFT or RIGHT position to prevent cross-feeding.

OIL

Oil Grade (Specification):

MIL-L-6082 Aviation Grade Straight Mineral Oil: Use to replenish supply during first 25 hours and at the first 25-hour oil change. Continue to use until a total of 50 hours has accumulated or oil consumption has stabilized.

NOTE

The airplane was delivered from the factory with a corrosion preventive aircraft engine oil. This oil should be drained after the first 25 hours of operation.

MIL-L-22851 Ashless Dispersant Oil: This oil must be used after first 50 hours or oil consumption has stabilized.

Recommended Viscosity For Temperature Range:

SAE 50 above 16°C (60°F).
SAE 10W30 or SAE 30 between -18°C (0°F) and 21°C (70°F).
SAE 10W30 or SAE 20 below -12°C (10°F).

NOTE

Multi-viscosity oil with a range of SAE 10W30 is recommended for improved starting in cold weather.

Oil Capacity:

Sump: 8 Quarts.
Total: 9 Quarts.

MAXIMUM CERTIFICATED WEIGHTS

Takeoff: 2800 lbs.
Landing: 2800 lbs.
Weight in Baggage Compartment:

Baggage Area "A" (on and forward of wheel well)-Station 145 to 172: See note below.

Baggage Area "B" (aft of wheel well) and Hatshelf-Station 172 to 195: See note below.

NOTE

The maximum baggage load, including the hatshelf, is 120 lbs. This load may be distributed as desired between baggage areas, provided 12 lbs. is not exceeded on the hatshelf.

AEROCCIDENTE
Escuela de Aviación

STANDARD AIRPLANE WEIGHTS

Standard Empty Weight,	Cardinal RG:	1707 lbs.
	Cardinal RG II:	1768 lbs.
Maximum Useful Load,	Cardinal RG:	1093 lbs.
	Cardinal RG II:	1032 lbs.

CABIN AND ENTRY DIMENSIONS

Detailed dimensions of the cabin interior and entry door openings are illustrated in Section 6.

BAGGAGE SPACE AND ENTRY DIMENSIONS

Dimensions of the baggage area and baggage door opening are illustrated in detail in Section 6.

SPECIFIC LOADINGS

Wing Loading: 16.1 lbs./sq. ft.
Power Loading: 14.0 lbs./hp.

SYMBOLS, ABBREVIATIONS AND TERMINOLOGY

GENERAL AIRSPEED TERMINOLOGY AND SYMBOLS

KCAS — Knots Calibrated Airspeed is indicated airspeed corrected for position and instrument error and expressed in knots. Knots calibrated airspeed is equal to KTAS in standard atmosphere at sea level.

KIAS — Knots Indicated Airspeed is the speed shown on the airspeed indicator and expressed in knots.

KTAS — Knots True Airspeed is the airspeed expressed in knots relative to undisturbed air which is KCAS corrected for altitude and temperature.

AEROCCIDENTE
Escuela de Aviación

V_A	Maneuvering Speed is the maximum speed at which you may use abrupt control travel.
V_{FE}	Maximum Flap Extended Speed is the highest speed permissible with wing flaps in a prescribed extended position.
V_{LE}	Maximum Landing Gear Extended Speed is the maximum speed at which an airplane can be safely flown with the landing gear extended.
V_{LO}	Maximum Landing Gear Operating Speed is the maximum speed at which the landing gear can be safely extended or retracted.
V_{NO}	Maximum Structural Cruising Speed is the speed that should not be exceeded except in smooth air, then only with caution.
V_{NE}	Never Exceed Speed is the speed limit that may not be exceeded at any time.
V_S	Stalling Speed or the minimum steady flight speed at which the airplane is controllable.
V_{S_O}	Stalling Speed or the minimum steady flight speed at which the airplane is controllable in the landing configuration at the most forward center of gravity.
V_X	Best Angle-of-Climb Speed is the speed which results in the greatest gain of altitude in a given horizontal distance.
V_Y	Best Rate-of-Climb Speed is the speed which results in the greatest gain in altitude in a given time.

METEOROLOGICAL TERMINOLOGY

OAT	Outside Air Temperature is the free air static temperature. It is expressed in either degrees Celsius (formerly Centigrade) or degrees Fahrenheit.
Standard Temperature	Standard Temperature is 15°C at sea level pressure altitude and decreases by 2°C for each 1000 feet of altitude.
Pressure Altitude	Pressure Altitude is the altitude read from an altimeter when the barometric subscale has been set to 29.92 inches of mercury (1013 mb).

AEROCCIDENTE
Escuela de Aviación

ENGINE POWER TERMINOLOGY

BHP	Brake Horsepower is the power developed by the engine.
RPM	Revolutions Per Minute is engine speed.
MP	Manifold Pressure is a pressure measured in the engine's induction system and is expressed in inches of mercury (Hg).

AIRPLANE PERFORMANCE AND FLIGHT PLANNING TERMINOLOGY

Demonstrated Crosswind Velocity	Demonstrated Crosswind Velocity is the velocity of the crosswind component for which adequate control of the airplane during takeoff and landing was actually demonstrated during certification tests. The value shown is not considered to be limiting.
Usable Fuel	Usable Fuel is the fuel available for flight planning.
Unusable Fuel	Unusable Fuel is the quantity of fuel that can not be safely used in flight.
GPH	Gallons Per Hour is the amount of fuel (in gallons) consumed per hour.
NMPG	Nautical Miles Per Gallon is the distance (in nautical miles) which can be expected per gallon of fuel consumed at a specific engine power setting and/or flight configuration.
g	g is acceleration due to gravity.

WEIGHT AND BALANCE TERMINOLOGY

Reference Datum	Reference Datum is an imaginary vertical plane from which all horizontal distances are measured for balance purposes.
Station	Station is a location along the airplane fuselage given in terms of the distance from the reference datum.
Arm	Arm is the horizontal distance from the reference datum to the center of gravity (C.G.) of an item.
Moment	Moment is the product of the weight of an item multiplied by its arm. (Moment divided by the constant 1000 is used in this handbook to simplify balance calculations by reducing the number of digits.)

AEROCCIDENTE
Escuela de Aviación

Center of Gravity (C.G.)	Center of Gravity is the point at which an airplane, or equipment, would balance if suspended. Its distance from the reference datum is found by dividing the total moment by the total weight of the airplane.
C.G. Arm	Center of Gravity Arm is the arm obtained by adding the airplane's individual moments and dividing the sum by the total weight.
C.G. Limits	Center of Gravity Limits are the extreme center of gravity locations within which the airplane must be operated at a given weight.
Standard Empty Weight	Standard Empty Weight is the weight of a standard airplane, including unusable fuel, full operating fluids and full engine oil.
Basic Empty Weight	Basic Empty Weight is the standard empty weight plus the weight of optional equipment.
Useful Load	Useful Load is the difference between takeoff weight and the basic empty weight.
Gross (Loaded) Weight	Gross (Loaded) Weight is the loaded weight of the airplane.
Maximum Takeoff Weight	Maximum Takeoff Weight is the maximum weight approved for the start of the takeoff run.
Maximum Landing Weight	Maximum Landing Weight is the maximum weight approved for the landing touchdown.
Tare	Tare is the weight of chocks, blocks, stands, etc. used when weighing an airplane, and is included in the scale readings. Tare is deducted from the scale reading to obtain the actual (net) airplane weight.

AEROCCIDENTE
Escuela de Aviación

SECTION 2
LIMITATIONS

TABLE OF CONTENTS

	Page
Introduction	2-3
Airspeed Limitations	2-4
Airspeed Indicator Markings	2-4
Power Plant Limitations	2-5
Power Plant Instrument Markings	2-6
Weight Limits	2-6
Center of Gravity Limits	2-7
Maneuver Limits	2-7
Flight Load Factor Limits	2-7
Kinds of Operation Limits	2-7
Fuel Limitations	2-8
Placards	2-8

AEROCCIDENTE
Escuela de Aviación

INTRODUCTION

Section 2 includes operating limitations, instrument markings, and basic placards necessary for the safe operation of the airplane, its engine, standard systems and standard equipment. The limitations included in this section have been approved by the Federal Aviation Administration. When applicable, limitations associated with optional systems or equipment are included in Section 9.

NOTE

The airspeeds listed in the Airspeed Limitations chart (figure 2-1) and the Airspeed Indicator Markings chart (figure 2-2) are based on Airspeed Calibration data shown in Section 5 with the normal static source. If the alternate static source is being used, ample margins should be observed to allow for the airspeed calibration variations between the normal and alternate static sources as shown in Section 5.

Your Cessna is certificated under FAA Type Certificate No. A20CE as Cessna Model No. 177RG.

AEROCCIDENTE
Escuela de Aviación

AIRSPEED LIMITATIONS

Airspeed limitations and their operational significance are shown in figure 2-1.

	SPEED	KCAS	KIAS	REMARKS
V_{NE}	Never Exceed Speed	169	174	Do not exceed this speed in any operation.
V_{NO}	Maximum Structural Cruising Speed	139	142	Do not exceed this speed except in smooth air, and then only with caution.
V_A	Maneuvering Speed: 2800 Pounds 2400 Pounds 2000 Pounds	 113 105 96	 113 105 96	Do not make full or abrupt control movements above this speed.
V_{FE}	Maximum Flap Extended Speed: To 10° Flaps 10° - 30° Flaps	 128 95	 130 95	Do not exceed these speeds with the given flap settings.
V_{LO}	Maximum Landing Gear Operating Speed	123	125	Do not extend or retract landing gear above this speed.
V_{LE}	Maximum Landing Gear Extended Speed	123	125	Do not exceed this speed with landing gear extended.
	Maximum Window Open Speed	105	105	Do not exceed this speed with windows open.

Figure 2-1. Airspeed Limitations

AIRSPEED INDICATOR MARKINGS

Airspeed indicator markings and their color code significance are shown in figure 2-2.

AEROCCIDENTE
Escuela de Aviación

MARKING	KIAS VALUE OR RANGE	SIGNIFICANCE
White Arc	50 - 95	Full Flap Operating Range. Lower limit is maximum weight V_{S_0} in landing configuration. Upper limit is maximum speed permissible with flaps extended.
Green Arc	59 - 142	Normal Operating Range. Lower limit is maximum weight V_S with flaps retracted. Upper limit is maximum structural cruising speed.
Yellow Arc	142 - 174	Operations must be conducted with caution and only in smooth air.
Red Line	174	Maximum speed for all operations.

Figure 2-2. Airspeed Indicator Markings

POWER PLANT LIMITATIONS

Engine Manufacturer: Avco Lycoming.
Engine Model Number: IO-360-A1B6D.
Engine Operating Limits for Takeoff and Continuous Operations:
Maximum Power: 200 BHP.
Maximum Engine Speed: 2700 RPM.
Maximum Cylinder Head Temperature: 246°C (475°F).
Maximum Oil Temperature: 118°C (245°F).
Oil Pressure, Minimum: 25 psi.
Maximum: 100 psi.
Fuel Pressure, Maximum: 10.0 psi (19.0 gal/hr).
Propeller Manufacturer: McCauley Accessory Division.
Propeller Model Number: B2D34C207/78TCA-0.
Propeller Diameter, Maximum: 78 inches.
Minimum: 76.5 inches.
Propeller Blade Angle at 30 Inch Station, Low: 12.9°.
High: 27.5°.
Propeller Operating Limits: Avoid continous operation between 1400 and 1750 RPM with less than 10 inches manifold pressure.

AEROCCIDENTE
Escuela de Aviación

POWER PLANT INSTRUMENT MARKINGS

Power plant instrument markings and their color code significance are shown in figure 2-3.

INSTRUMENT	RED LINE	GREEN ARC	YELLOW ARC	RED LINE
	MINIMUM LIMIT	NORMAL OPERATING	CAUTION RANGE	MAXIMUM LIMIT
Tachometer	- - -	2100 - 2500 RPM	1400 - 1750 RPM	2700 RPM
Manifold Pressure	- - -	15-25 in. Hg	- - -	- - -
Oil Temperature	- - -	100° - 245°F	- - -	245°F
Cylinder Head Temperature	- - -	200° - 475°F	- - -	475°F
Fuel Pressure (Flow)	- - -	6.0-13.0 gal/hr	- - -	19.0 gal/hr (10.0 psi)
Oil Pressure	25 psi	60-90 psi	- - -	100 psi

Figure 2-3. Power Plant Instrument Markings

WEIGHT LIMITS

Maximum Takeoff Weight: 2800 lbs.
Maximum Landing Weight: 2800 lbs.
Maximum Weight in Baggage Compartment:
Baggage Area "A" (on and forward of wheel well) -
Station 145 to 172: See note below.
Baggage Area "B" (aft of wheel well) and Hatshelf -
Station 172 to 195: See note below.

NOTE

The maximum baggage load, including the hatshelf, is 120 lbs. This load may be distributed as desired between baggage areas, provided 12 lbs. is not exceeded on the hatshelf.

AEROCCIDENTE
Escuela de Aviación

CENTER OF GRAVITY LIMITS

Center of Gravity Range with Landing Gear Extended:

Forward: 101.0 inches aft of datum at 2200 lbs. or less, with straight line variation to 105.8 inches aft of datum at 2800 lbs.

Aft: 114.7 inches aft of datum at all weights.

Moment Change Due To Retracting Landing Gear: +2776 lb. -ins.

Reference Datum: 54.0 inches forward of the front face of the lower portion of the firewall.

MANEUVER LIMITS

This airplane is certificated in the normal category. The normal category is applicable to aircraft intended for non-aerobatic operations. These include any maneuvers incidental to normal flying, stalls (except whip stalls), lazy eights, chandelles, and steep turns in which the angle of bank is not more than 60°.

Aerobatic maneuvers, including spins, are not approved.

FLIGHT LOAD FACTOR LIMITS

Flight Load Factors

*Flaps Up: +3.8g, -1.52g

*Flaps Down: +2.0g

*The design load factors are 150% of the above, and in all cases, the structure meets or exceeds design loads.

KINDS OF OPERATION LIMITS

The airplane is equipped for day VFR and may be equipped for night VFR and/or IFR operations. FAR Part 91 establishes the minimum required instrumentation and equipment for these operations. The reference to types of flight operations on the operating limitations placard reflects equipment installed at the time of Airworthiness Certificate issuance.

Flight into known icing conditions is prohibited.

AEROCCIDENTE
Escuela de Aviación

FUEL LIMITATIONS

2 Standard Tanks: 25.5 US gallons each
Total Fuel: 51 US gal
Usable Fuel (all flight conditions): 50 US gallons
Unusable Fuel: 1 US gallon

NOTE

Use both tanks for takeoff and landing.

NOTE

To ensure desired fuel capacity when refueling, place the fuel selector valve in either LEFT or RIGHT position to prevent cross-feeding.

Fuel Grade (and Color): 100/130 Minimum Grade Aviation Fuel (green).
100/130 low lead aviation fuel (blue) with a lead content limited to 2 cc per gallon is also approved.

PLACARDS

The following information is displayed in the form of composite or individual placards.

(1) In full view of the pilot: (The "DAY-NIGHT-VFR-IFR" entry, shown on the example below, will vary as the airplane is equipped.)

This airplane must be operated as a normal category airplane in compliance with the operating limitations as stated in the form of placards, markings, and manuals.

MAXIMUMS

MANEUVERING SPEED (IAS)		113 knots
GEAR EXTENSION SPEED (IAS)		125 knots
GROSS WEIGHT		2800 lbs.
FLIGHT LOAD FACTOR	Flaps Up	+3.8, -1.52
	Flaps Down	+2.0

No acrobatic maneuvers, including spins, approved. Altitude loss in a stall recovery - 190 ft. Flight into known icing conditions prohibited. This airplane is certified for the following flight operations as of date of original airworthiness certificate:
DAY - NIGHT - VFR - IFR

(2) On control lock:

Control lock - remove before starting engine.

(3) (SOME MODELS)

Both -- gal. Left -- gal. Right -- gal. Use both for takeoff and landing. When switching from a dry tank, turn auxiliary pump on and use full rich mixture until power is restored.

(4) Aft of fuel tank cap:

Service this airplane with 100/130 grade aviation gasoline. Total capacity 21 gal. Capacity to line of holes inside filler neck 22.0 gal.

(5) In baggage compartment:

120 lb. maximum baggage including 12 lbs. maximum in baggage wall hatshelf. For additional loading instructions see weight and balance data.

(6) Next to door ventilation windows:

Do not open window above 105 knots or when using alternate static source.

AEROCCIDENTE
Escuela de Aviación

(7) On flap control and indicator:

0° to 10° - T.O.	(Takeoff range with blue color code and 130 knot callout; also, mechanical detent at 10°)
10° - 20° - 30°	(Indices at these positions with white color code and 95 knot callout; also, mechanical detent at 20°).

(8) At the top of the control pedestal:

MAXIMUM POWER MIXTURE

ALTITUDE	S. L.	4000	8000	12,000
GAL./HR	17	15	13	10

AVOID CONTINUOUS OPERATION BETWEEN 1400 AND 1750 RPM WITH LESS THAN 10" MANIFOLD PRESSURE.

(9) On Emergency Landing Gear Pump Handle Cover:

EMERGENCY HAND PUMP
PULL UP

TO EXTEND GEAR MANUALLY

a. Pull out landing gear circuit breaker.
b. Place gear lever in DOWN position.
c. Extend pump handle.
d. Pump approximately 40 pressure strokes.
e. Stop when resistance becomes heavy.
f. Verify gear is down by observing green light.

IMPORTANT

To permit normal gear retraction after hand pump use, push in landing gear circuit breaker.

AEROCCIDENTE
Escuela de Aviación

SECTION 3
EMERGENCY PROCEDURES

TABLE OF CONTENTS

	Page
Introduction	3-3
Airspeeds For Emergency Operation	3-3
OPERATIONAL CHECKLISTS	
Engine Failures	3-3
Engine Failure During Takeoff Run	3-3
Engine Failure Immediately After Takeoff	3-4
Engine Failure During Flight	3-4
Forced Landings	3-4
Emergency Landing Without Engine Power	3-4
Precautionary Landing With Engine Power	3-4
Ditching	3-5
Fires	3-5
During Start On Ground	3-5
Engine Fire In Flight	3-6
Electrical Fire In Flight	3-6
Cabin Fire	3-6
Wing Fire	3-7
Icing	3-7
Inadvertent Icing Encounter	3-7
Static Source Blockage (Erroneous Instrument Reading Suspected)	3-7
Landing Gear Malfunction Procedures	3-7
Landing Gear Fails To Retract	3-7
Landing Gear Fails To Extend	3-8
Gear Up Landing	3-8
Landing Without Positive Indication Of Gear Locking	3-8
Landing With a Defective Nose Gear (Or Flat Nose Tire)	3-8
Landing With a Flat Main Tire	3-9
Electrical Power Supply System Malfunctions	3-9
Over-Voltage Light Illuminates	3-9

AEROCCIDENTE
Escuela de Aviación

TABLE OF CONTENTS (Continued)

Page

Ammeter Shows Discharge 3-9

AMPLIFIED PROCEDURES

Engine Failure 3-11
Forced Landings 3-12
Landing Without Stabilator Control 3-12
Fires 3-12
Emergency Operation In Clouds (Vacuum System Failure) 3-12
Executing A 180° Turn In Clouds 3-13
Emergency Descent Through Clouds 3-13
Recovery From a Spiral Dive 3-14
Flight In Icing Conditions 3-14
Static Source Blocked 3-14
Spins 3-15
Rough Engine Operation Or Loss Of Power 3-15
Spark Plug Fouling 3-15
Magneto Malfunction 3-16
Low Oil Pressure 3-16
Landing Gear Malfunction Procedures 3-16
Retraction Malfunctions 3-17
Extension Malfunctions 3-17
Gear Up Landing 3-17
Electrical Power Supply System Malfunctions 3-18
Excessive Rate Of Charge 3-18
Insufficient Rate Of Charge 3-19

AEROCCIDENTE
Escuela de Aviación

INTRODUCTION

Section 3 provides checklist and amplified procedures for coping with emergencies that may occur. Emergencies caused by airplane or engine malfunctions are extremely rare if proper preflight inspections and maintenance are practiced. Enroute weather emergencies can be minimized or eliminated by careful flight planning and good judgement when unexpected weather is encountered. However, should an emergency arise the basic guidelines described in this section should be considered and applied as necessary to correct to problem. Emergency procedures associated with the ELT and other optional systems can be found in Section 9.

AIRSPEEDS FOR EMERGENCY OPERATION

Engine Failure After Takeoff:	
Wing Flaps Up	70 KIAS
Wing Flaps Down	65 KIAS
Maneuvering Speed:	
2800 Lbs	113 KIAS
2400 Lbs	105 KIAS
2000 Lbs	96 KIAS
Maximum Glide:	
2800 Lbs	75 KIAS
2400 Lbs	70 KIAS
2000 Lbs	65 KIAS
Precautionary Landing With Engine Power	65 KIAS
Landing Without Engine Power:	
Wing Flaps Up	75 KIAS
Wing Flaps Down	65 KIAS

OPERATIONAL CHECKLISTS

ENGINE FAILURES

ENGINE FAILURE DURING TAKEOFF RUN

(1) Throttle -- IDLE.
(2) Brakes -- APPLY.
(3) Wing Flaps -- RETRACT.
(4) Mixture -- IDLE CUT-OFF.
(5) Ignition Switch -- OFF.

AEROCCIDENTE
Escuela de Aviación

ENGINE FAILURE IMMEDIATELY AFTER TAKEOFF

(1) Airspeed -- 70 KIAS.
(2) Mixture -- IDLE CUT-OFF.
(3) Fuel Selector Valve -- OFF.
(4) Ignition Switch -- OFF.
(5) Wing Flaps -- AS REQUIRED.
(6) Master Switch -- OFF.

ENGINE FAILURE DURING FLIGHT

(1) Airspeed -- 75 KIAS.
(2) Fuel Selector Valve -- BOTH.
(3) Mixture -- RICH.
(4) Auxiliary Fuel Pump -- ON.
(5) Ignition Switch -- BOTH (or START if propeller is stopped).

FORCED LANDINGS

EMERGENCY LANDING WITHOUT ENGINE POWER

(1) Airspeed -- 75 KIAS (flaps UP).
65 KIAS (flaps DOWN).
(2) Mixture -- IDLE CUT-OFF.
(3) Fuel Selector Valve -- OFF.
(4) Ignition Switch -- OFF.
(5) Landing Gear -- DOWN (UP if terrain is rough or soft).
(6) Wing Flaps -- AS REQUIRED (30° recommended).
(7) Master Switch -- OFF.
(8) Doors -- UNLATCH PRIOR TO TOUCHDOWN.
(9) Touchdown -- SLIGHTLY TAIL LOW.
(10) Brakes -- APPLY HEAVILY.

PRECAUTIONARY LANDING WITH ENGINE POWER

(1) Airspeed -- 65 KIAS.
(2) Wing Flaps -- 20°.
(3) Selected Field -- FLY OVER, noting terrain and obstructions, then retract flaps upon reaching a safe altitude and airspeed.
(4) Radio and Electrical Switches -- OFF.
(5) Landing Gear -- DOWN (UP if terrain is rough or soft).
(6) Wing Flaps -- 30° (on final approach).
(7) Airspeed -- 65 KIAS.
(8) Master Switch -- OFF.

AEROCCIDENTE
Escuela de Aviación

(9) Doors -- UNLATCH PRIOR TO TOUCHDOWN.
(10) Touchdown -- SLIGHTLY TAIL LOW.
(11) Ignition Switch -- OFF.
(12) Brakes -- APPLY HEAVILY.

DITCHING

(1) Radio -- TRANSMIT MAYDAY on 121. 5 MHz, giving location and intentions.
(2) Heavy Objects (in baggage area) -- SECURE or JETTISON.
(3) Landing Gear -- UP.
(4) Wing Flaps -- 30°.
(5) Power -- ESTABLISH 300 FT/MIN DESCENT at 60 KIAS.
(6) Approach -- High Winds, Heavy Seas -- INTO THE WIND.
Light Winds, Heavy Swells -- PARALLEL TO SWELLS.

NOTE

If no power is available, approach with 10° flaps at 65 KIAS.

(7) Cabin Doors -- UNLATCH.
(8) Touchdown -- LEVEL ATTITUDE AT 300 FT/MIN DESCENT.
(9) Face -- CUSHION at touchdown with folded coat or seat cushion.
(10) Airplane -- EVACUATE through cabin doors. If necessary, open vent window and flood cabin to equalize pressure so doors can be opened.
(11) Life Vests and Raft -- INFLATE.

FIRES

DURING START ON GROUND

(1) Auxiliary Fuel Pump -- OFF.
(2) Mixture -- IDLE CUT-OFF.
(3) Ignition Switch -- OFF.
(4) Parking Brake -- RELEASE.
(5) Fire Extinguisher (if installed) -- OBTAIN.
(6) Airplane -- EVACUATE.
(7) Fire -- EXTINGUISH.

NOTE

If sufficient ground personnel are available (and fire is not too dangerous) move airplane away from the

AEROCCIDENTE
Escuela de Aviación

fire by pushing rearward on the leading edge of the stabilator.

(8) Fire Damage -- INSPECT, repair damage or replace damaged components or wiring before conducting another flight.

ENGINE FIRE IN FLIGHT

(1) Mixture -- IDLE CUT-OFF.
(2) Fuel Selector Valve -- OFF.
(3) Master Switch -- OFF.
(4) Cabin Heat and Air -- OFF (except overhead vents).
(5) Airspeed -- 100 KIAS (If fire is not extinguished, increase glide speed to find an airspeed which will provide an incombustible mixture).
(6) Forced Landing -- EXECUTE (as described in Landing Without Engine Power).

ELECTRICAL FIRE IN FLIGHT

(1) Master Switch -- OFF.
(2) All Other Switches (except ignition switch) -- OFF.
(3) Vents/Cabin Air/Heat -- CLOSED.
(4) Fire Extinguisher -- ACTIVATE (if available).

If fire appears out and electrical power is necessary for continuance of flight:

(5) Master Switch -- ON.
(6) Circuit Breakers -- CHECK for faulty circuit, do not reset.
(7) Radio/Electrical Switches -- ON one at a time, with delay after each until short circuit is localized.
(8) Vents/Cabin Air/Heat -- OPEN when it is ascertained that fire is completely extinguished.

CABIN FIRE

(1) Master Switch -- OFF.
(2) Vents/Cabin Air/Heat -- CLOSED (to avoid drafts).
(3) Fire Extinguisher -- ACTIVATE (if available).

WARNING

After discharging an extinguisher within a closed cabin, ventilate the cabin.

(4) Land the airplane as soon as possible to inspect for damage.

AEROCCIDENTE
Escuela de Aviación

WING FIRE

(1) Navigation Light Switch -- OFF.
(2) Pitot Heat Switch (if installed) -- OFF.

NOTE

Perform a sideslip to keep the flames away from the fuel tank and cabin, and land as soon as possible.

ICING

INADVERTENT ICING ENCOUNTER

(1) Turn pitot heat switch ON (if installed).
(2) Turn back or change altitude to obtain an outside air temperature that is less conducive to icing.
(3) Pull left cabin air, heater and defroster control knobs full out to obtain windshield defroster airflow.
(4) Increase RPM to minimize ice build-up on propeller blades.
(5) Plan a landing at the nearest airport. With an extremely rapid ice build-up, select a suitable "off airport" landing site.
(6) With an ice accumulation of 1/4 inch or more on the wing leading edges, be prepared for significantly higher stall speeds.
(7) Extend wing flaps 10° with ice accumulations of one inch or less. With heavier ice accumulations, approach with flaps retracted to ensure adequate stabilator effectiveness in the approach and landing.
(8) Perform a landing approach using a forward slip, if necessary, for improved visibility.
(9) Approach at 75-85 KIAS depending upon the amount of ice accumulation.
(10) Perform a landing in level attitude.

STATIC SOURCE BLOCKAGE
(Erroneous Instrument Reading Suspected)

(1) Vent Windows -- CLOSED.
(2) Alternate Static Source Valve -- PULL ON.
(3) Airspeed -- Consult appropriate calibration tables in Section 5.

LANDING GEAR MALFUNCTION PROCEDURES

LANDING GEAR FAILS TO RETRACT

(1) Master Switch -- ON.

AEROCCIDENTE
Escuela de Aviación

(2) Landing Gear Lever -- CHECK (lever Full Up).
(3) Landing Gear and Gear Indicator Circuit Breakers -- IN.
(4) Gear Up Light -- CHECK.
(5) Landing Gear Lever -- RECYCLE.
(6) Gear Motor -- CHECK operation (ammeter).

LANDING GEAR FAILS TO EXTEND

(1) Landing Gear Circuit Breaker -- PULL OUT.
(2) Landing Gear Lever -- DOWN.
(3) Emergency Hand Pump -- LIFT COVER, EXTEND HANDLE, and PUMP (until resistance becomes heavy -- about 40 strokes).
(4) Gear Down Light -- ON.
(5) Pump Handle -- STOW.
(6) Landing Gear Circuit Breakers -- IN.

GEAR UP LANDING

(1) Landing Gear Lever -- UP.
(2) Landing Gear Circuit Breaker -- IN.
(3) Radio and Electrical Switches -- OFF.
(4) Wing Flaps -- 30° (on final approach).
(5) Airspeed -- 65 KIAS.
(6) Master Switch -- OFF.
(7) Doors -- UNLATCH PRIOR TO TOUCHDOWN.
(8) Touchdown -- SLIGHTLY TAIL LOW.
(9) Ignition Switch -- OFF.
(10) Airplane -- EVACUATE.

LANDING WITHOUT POSITIVE INDICATION OF GEAR LOCKING

(1) Before Landing Check -- COMPLETE.
(2) Approach -- NORMAL full flap.
(3) Landing Gear Down Pressure -- MAINTAIN with hand pump.
(4) Landing -- TAIL LOW as smoothly as possible.
(5) Taxi -- SLOWLY.

LANDING WITH A DEFECTIVE NOSE GEAR (Or Flat Nose Tire)

(1) Movable Load -- TRANSFER to baggage area.
(2) Passenger -- MOVE to rear seat.
(3) Before Landing Checklist -- COMPLETE.
(4) Runway -- HARD SURFACE or SMOOTH SOD.
(5) Emergency Hand Pump -- ACTUATE to maintain gear down pressure, continue through roll-out (defective gear only).
(6) Wing Flaps -- 30°.

AEROCCIDENTE
Escuela de Aviación

(7) Master Switch -- OFF.
(8) Land -- SLIGHTLY TAIL LOW.
(9) Mixture -- IDLE CUT-OFF.
(10) Ignition Switch -- OFF.
(11) Fuel Selector Valve -- OFF.
(12) Stabilator Control -- HOLD NOSE OFF GROUND as long as possible.
(13) Airplane -- EVACUATE as soon as it stops.

LANDING WITH A FLAT MAIN TIRE

(1) Wing Flaps -- AS DESIRED (0°-10° below 130 KIAS, 10°-30° below 95 KIAS).
(2) Stabilator Control -- NOSE HIGH.
(3) Aileron Control -- BANK TOWARD GOOD TIRE.
(4) Touchdown -- GOOD TIRE FIRST, hold airplane off flat tire as long as possible.

ELECTRICAL POWER SUPPLY SYSTEM MALFUNCTIONS

OVER-VOLTAGE LIGHT ILLUMINATES

(1) Master Switch -- OFF (both sides).
(2) Master Switch -- ON.
(3) Over-voltage Light -- OFF.

If over-voltage light illuminates again:

(4) Flight -- TERMINATE as soon as practical.

AMMETER SHOWS DISCHARGE

(1) Alternator -- OFF.
(2) Nonessential Electrical Equipment -- OFF.
(3) Flight -- TERMINATE as soon as practical.

AMPLIFIED PROCEDURES

ENGINE FAILURE

If an engine failure occurs during the takeoff run, the most important thing to do is stop the airplane on the remaining runway. Those extra items on the checklist will provide added safety during a failure of this type.

Prompt lowering of the nose to maintain airspeed and establish a glide attitude is the first response to an engine failure after takeoff. In most cases, the landing should be planned straight ahead with only small changes in direction to avoid obstructions. Altitude and airspeed are seldom sufficient to execute a 180° gliding turn necessary to return to the runway. The checklist procedures assume that adequate time exists to secure the fuel and ignition systems prior to touchdown.

After an engine failure in flight, the best glide speed as shown in Figure 3-1 should be established as quickly as possible. While gliding toward a suitable landing area, an effort should be made to identify the cause of the failure. If time permits, an engine restart should be attempted as shown in the checklist. If the engine cannot be restarted, a forced landing without power must be completed.

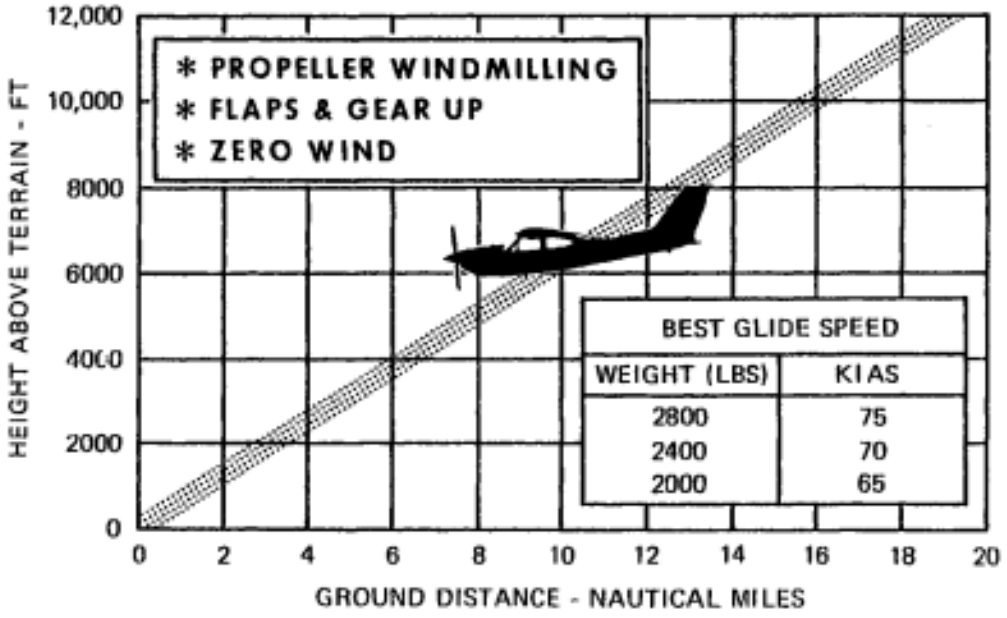

Figure 3-1. Maximum Glide

AEROCCIDENTE
Escuela de Aviación

FORCED LANDINGS

If all attempts to restart the engine fail and a forced landing is imminent select a suitable field and prepare for the landing as discussed in the checklist for engine off emergency landings.

Before attempting an "off airport" landing with engine power available, one should drag the landing area at a safe but low altitude to inspect the terrain for obstructions and surface conditions, proceeding as discussed under the Precautionary Landing With Engine Power checklist.

Prepare for ditching by securing or jettisoning heavy objects located in the baggage area and collect folded coats or cushions for protection of occupants' face at touchdown. Transmit Mayday message on 121.5 MHz giving location and intentions.

LANDING WITHOUT STABILATOR CONTROL

Trim for horizontal flight with an airspeed of approximately 80 KIAS, landing gear extended, and flaps set to 10°, by using throttle and trim tab control. Then do not change the trim tab setting and control the glide angle by adjusting power exclusively.

At flareout, the nose-down attitude resulting from power reduction is an adverse factor and the airplane may hit on the nose wheel. Consequently, at flareout the trim tab should be set at full nose up position and the power adjusted so that the airplane will rotate to the horizontal attitude for touchdown. Close the throttle at touchdown.

FIRES

Although engine fires are extremely rare in flight, the steps of the appropriate checklist should be followed if one is encountered. After completion of this procedure, execute a forced landing.

The initial indication of an electrical fire is usually the odor of burning insulation. The checklist for this problem should result in elimination of the fire.

EMERGENCY OPERATION IN CLOUDS
(Vacuum System Failure)

In the event of a vacuum system failure during flight in marginal

AEROCCIDENTE
Escuela de Aviación

weather, the directional indicator and attitude indicator will be disabled, and the pilot will have to rely on the turn coordinator or the turn and bank indicator if he inadvertently flies into clouds. The following instructions assume that only the electrically-powered turn coordinator or the turn and bank indicator is operative, and that the pilot is not completely proficient in instrument flying.

EXECUTING A 180° TURN IN CLOUDS

Upon inadvertently entering the clouds, an immediate plan should be made to turn back as follows:

(1) Note the time of the minute hand and observe the position of the sweep second hand on the clock.
(2) When the sweep second hand indicates the nearest half minute, initiate a standard rate left turn, holding the turn coordinator symbolic airplane wing opposite the lower left index mark for 60 seconds. Then roll back to level flight by leveling the miniature airplane.
(3) Check accuracy of the turn by observing the compass heading which should be the reciprocal of the original heading.
(4) If necessary, adjust heading primarily with skidding motions rather than rolling motions so that the compass will read more accurately.
(5) Maintain altitude and airspeed by cautious application of stabilator control. Avoid overcontrolling by keeping the hands off the control wheel and steering only with rudder.

EMERGENCY DESCENT THROUGH CLOUDS

If conditions preclude reestablishment of VFR flight by a 180° turn, a descent through a cloud deck to VFR conditions may be appropriate. If possible, obtain radio clearance for an emergency descent through clouds. To guard against a spiral dive, choose an easterly or westerly heading to minimize compass card swings due to changing bank angles. In addition, keep hands off the control wheel and steer a straight course with rudder control by monitoring the turn coordinator. Occasionally check the compass heading and make minor corrections to hold an approximate course. Before descending into the clouds, set up a stabilized let-down condition as follows:

(1) Extend landing gear.
(2) Reduce power to set up a 500 to 800 ft./min. rate of descent.
(3) Apply full rich mixture.
(4) Adjust the stabilator and rudder trim control wheels for a stabilized descent at 80 KIAS.
(5) Keep hands off control wheel.

AEROCCIDENTE
Escuela de Aviación

(6) Monitor turn coordinator and make corrections by rudder alone.
(7) Adjust rudder trim to relieve unbalanced rudder force, if present.
(8) Check trend of compass card movement and make cautious corrections with rudder to stop turn.
(9) Upon breaking out of clouds, resume normal cruising flight.

RECOVERY FROM A SPIRAL DIVE

If a spiral is encountered, proceed as follows:

(1) Close the throttle.
(2) Stop the turn by using coordinated aileron and rudder control to align the symbolic airplane in the turn coordinator with the horizon reference line.
(3) Cautiously apply stabilator back pressure to slowly reduce the indicated airspeed to 80 KIAS.
(4) Adjust the stabilator trim control to maintain an 80 KIAS glide.
(5) Keep hands off the control wheel, using rudder control to hold a straight heading. Use rudder trim to relieve unbalanced rudder force, if present.
(6) Clear engine occasionally, but avoid using enough power to disturb the trimmed glide.
(7) Upon breaking out of clouds, resume normal cruising flight.

FLIGHT IN ICING CONDITIONS

Flight into icing conditions is prohibited. An inadvertent encounter with these conditions can best be handled using the checklist procedures. The best procedure, of course, is to turn back or change altitude to escape icing conditions.

STATIC SOURCE BLOCKED

If erroneous readings of the static system instruments (airspeed, altimeter and rate-of-climb) are suspected, the alternate static source valve should be pulled on, thereby supplying static pressure to these instruments from inside the rear fuselage.

To avoid the probability of large errors, the vent windows should not be open when using the alternate static source. With the windows closed, the most adverse vent configuration results in minor airspeed and altimeter variations of less than 5 knots and 50 feet respectively (instruments read higher than normal). However, opening the vent windows will probably result in large errors (airspeed and altimeter readings averaging up to 10 knots and 70 feet lower than normal in the approach speed range and

AEROCCIDENTE
Escuela de Aviación

increasing to 13 knots and 110 feet lower than normal at the placarded maximum window open speed of 105 KIAS) depending upon the sealing effectiveness of the baggage curtain.

With the alternate static source on, adjust indicated airspeed during climb or approach, according to the appropriate alternate static source airspeed calibration table in Section 5 to cause the airplane to be flown at the normal operating speeds.

SPINS

Intentional spins are prohibited in this airplane. Should an inadvertent spin occur, the following recovery procedure should be used:

(1) RETARD THROTTLE TO IDLE POSITION.
(2) PLACE AILERONS IN NEUTRAL POSITION.
(3) APPLY AND HOLD FULL RUDDER OPPOSITE TO THE DIRECTION OF ROTATION.
(4) JUST AFTER THE RUDDER REACHES THE STOP, MOVE THE WHEEL BRISKLY FORWARD FAR ENOUGH TO BREAK THE STALL.
(5) HOLD THESE CONTROL INPUTS UNTIL ROTATION STOPS. Premature relaxation of the control inputs may extend recovery.
(6) AS ROTATION STOPS, NEUTRALIZE RUDDER, AND MAKE A SMOOTH RECOVERY FROM THE RESULTING DIVE.

NOTE

If disorientation precludes a visual determination of the direction of rotation, the symbolic airplane in the turn coordinator or the needle of the turn and bank indicator may be referred to for this information.

ROUGH ENGINE OPERATION OR LOSS OF POWER

SPARK PLUG FOULING

A slight engine roughness in flight may be caused by one or more spark plugs becoming fouled by carbon or lead deposits. This may be verified by turning the ignition switch momentarily from BOTH to either L or R position. An obvious power loss in single ignition operation is evidence of spark plug or magneto trouble. Assuming that spark plugs are the more likely cause, lean the mixture to the recommended lean

AEROCCIDENTE
Escuela de Aviación

setting for cruising flight. If the problem does not clear up in several minutes, determine if a richer mixture setting will produce smoother operation. If not, proceed to the nearest airport for repairs using the BOTH position of the ignition switch unless extreme roughness dictates the use of a single ignition position.

MAGNETO MALFUNCTION

A sudden engine roughness or misfiring is usually evidence of magneto problems. Switching from BOTH to either L or R ignition switch position will identify which magneto is malfunctioning. Select different power settings and enrichen the mixture to determine if continued operation on BOTH magnetos is practicable. If not, switch to the good magneto and proceed to the nearest airport for repairs.

LOW OIL PRESSURE

If low oil pressure is accompanied by normal oil temperature, there is a possibility that the oil pressure gage or relief valve is malfunctioning, or a leak has developed in the oil line from the engine to the oil pressure gage transducer on the firewall. A leak in this line is not necessarily cause for an immediate precautionary landing because an orifice in the line will prevent a sudden loss of oil from the engine sump. Low electrical system voltage will also cause low oil pressure gage readings. This can be verified by checking the condition of the electrical system and the indications of the other gages in the engine instrument cluster. As electrical system voltage to the instrument cluster drops, all gage readings will drop proportionally. In the event of a suspected mechanical or electrical malfunction, land as soon as practical to properly identify and correct the problem.

If a total loss of oil pressure is accompanied by a rise in oil temperature, there is good reason to suspect an engine failure is imminent. Reduce engine power immediately and select a suitable forced landing field. Use only the minimum power required to reach the desired touchdown spot.

LANDING GEAR MALFUNCTION PROCEDURES

In the event of possible landing gear retraction or extension malfunctions, there are several general checks that should be made prior to initiating the steps outlined in the following paragraphs.

In analyzing a landing gear malfunction, first check that the master switch is ON and the LDG GEAR and GEAR IND circuit breakers are in;

AEROCCIDENTE
Escuela de Aviación

reset if necessary. Also, check both landing gear position indicator lights for operation by "pressing-to-test" the light units and rotating them at the same time to check for open dimming shutters. A burned-out bulb can be replaced in flight by using the bulb from the remaining gear position indicator light.

RETRACTION MALFUNCTIONS

If the landing gear fails to retract normally, or an intermittent gear UP indicator light is present, check the gear UP indicator light for proper operation and attempt to recycle the landing gear. Place the landing gear lever in the DWN position. Reposition the gear lever in the UP position for another retraction attempt. If the gear UP indicator light still fails to illuminate, an immediate landing is not necessary. The flight may continue to an airport having maintenance facilities if, after the gear has been apparently retracted, cruise speed appears normal with no abnormal buffeting, and the landing gear motor is not running. However, if the gear motor does not shut off after retraction, or the gear UP light continues to operate intermittently, the landing gear should be extended until maintenance can be obtained.

NOTE

Test for landing gear motor operation as follows: At a safe altitude, cycle landing gear at 70 KIAS with low power and listen for the motor to shut off following the normal sound of gear retraction (approximately 12 seconds). Intermittent gear motor operation may also be detected by momentary fluctuations of the ammeter needle.

EXTENSION MALFUNCTIONS

Normal landing gear extension time is approximately 12 seconds. If the landing gear will not extend normally, perform the general checks of circuit breakers and master switch and repeat the normal extension procedures at a reduced airspeed of 70 KIAS. If efforts to extend and lock the gear through the normal landing gear system fail, the gear can be manually extended (as long as hydraulic system fluid has not been completely lost) by use of the emergency hand pump. The hand pump is located under a hinged cover between the front seats.

A checklist is provided for step-by-step instructions for a manual gear extension.

GEAR UP LANDING

If the landing gear remains retracted or is only partially extended,

AEROCCIDENTE
Escuela de Aviación

and all efforts to fully extend it (including manual extension) have failed, plan a wheels up landing. In preparation for landing, reposition the landing gear lever to UP and push the LDG GEAR circuit breaker in to allow the landing gear to swing into the gear wells at touchdown. Then proceed in accordance with the checklist.

ELECTRICAL POWER SUPPLY SYSTEM MALFUNCTIONS

Malfunctions in the electrical power supply system can be detected by periodic monitoring of the ammeter and over-voltage warning light; however, the cause of these malfunctions is usually difficult to determine. A broken alternator drive belt or wiring is most likely the cause of alternator failures, although other factors could cause the problem. A damaged or improperly adjusted voltage regulator can also cause malfunctions. Problems of this nature constitute an electrical emergency and should be dealt with immediately. Electrical power malfunctions usually fall into two categories; excessive rate of charge and insufficient rate of charge. The following paragraphs describe the recommended remedy for each situation.

EXCESSIVE RATE OF CHARGE

After engine starting and heavy electrical usage at low engine speeds (such as extended taxiing) the battery condition will be low enough to accept above normal charging during the initial part of a flight. However, after thirty minutes of cruising flight, the ammeter should be indicating less than four needle widths of charging current. If the charging rate were to remain above this value on a long flight, the battery would overheat and evaporate the electrolyte at an excessive rate. Electronic components in the electrical system could be adversely affected by higher than normal voltage if a faulty voltage regulator setting is causing the overcharging. To preclude these possibilities, an over-voltage sensor will automatically shut down the alternator and the over-voltage warning light will illuminat if the charge voltage reaches approximately 16 volts. Assuming that the malfunction was only momentary, an attempt should be made to reactivate the alternator system. To do this, turn both sides of the master switch off and then on again. If the problem no longer exists, normal alternator charging will resume and the warning light will go off. If the light comes on again, a malfunction is confirmed. In this event, the flight should be terminated and/or the current drain on the battery minimized because the battery can supply the electrical system for only a limited period of time. If the emergency occurs at night, power must be conserved for later operation of the landing gear and wing flaps and possible use of the landing lights during landing.

AEROCCIDENTE
Escuela de Aviación

INSUFFICIENT RATE OF CHARGE

If the ammeter indicates a continuous discharge rate in flight, the alternator is not supplying power to the system and should be shut down since the alternator field circuit may be placing an unnecessary load on the system. All nonessential equipment should be turned off and the flight terminated as soon as practical.

AEROCCIDENTE
Escuela de Aviación

SECTION 4
NORMAL PROCEDURES

TABLE OF CONTENTS

	Page
Introduction	4-3
Speeds For Normal Operation	4-3
CHECKLIST PROCEDURES	
Preflight Inspection	4-5
Cabin	4-5
Empennage	4-5
Right Wing, Trailing Edge	4-5
Right Wing	4-5
Nose	4-6
Left Wing	4-6
Left Wing, Leading Edge	4-6
Left Wing, Trailing Edge	4-6
Before Starting Engine	4-6
Starting Engine	4-7
Before Takeoff	4-7
Takeoff	4-8
Normal Takeoff	4-8
Maximum Performance Takeoff	4-8
Enroute Climb	4-9
Normal Climb	4-9
Maximum Performance Climb	4-9
Cruise	4-9
Descent	4-9
Before Landing	4-10
Balked Landing	4-10
Normal Landing	4-10
After Landing	4-10
Securing Airplane	4-10
AMPLIFIED PROCEDURES	
Starting Engine	4-11

AEROCCIDENTE
Escuela de Aviación

TABLE OF CONTENTS (Continued)

	Page
Taxiing	4-12
Before Takeoff	4-12
Warm-Up	4-12
Magneto Check	4-12
Alternator Check	4-12
Takeoff	4-14
Power Check	4-14
Wing Flap Settings	4-14
Landing Gear Retraction	4-15
Crosswind Takeoff	4-15
Enroute Climb	4-15
Cruise	4-16
Leaning With A Cessna Economy Mixture Indicator (EGT)	4-17
Stalls	4-17
Before Landing	4-18
Landing	4-18
Short Field Landing	4-18
Crosswind Landing	4-19
Balked Landing	4-19
Cold Weather Operation	4-19
Starting	4-19
Hot Weather Operation	4-20
Noise Abatement	4-20

AEROCCIDENTE
Escuela de Aviación

INTRODUCTION

Section 4 provides checklist and amplified procedures for the conduct of normal operation. Normal procedures associated with Optional Systems can be found in Section 9.

SPEEDS FOR NORMAL OPERATION

Unless otherwise noted, the following speeds are based on a maximum weight of 2800 pounds and may be used for any lesser weight. However, to achieve the performance specified in Section 5 for takeoff distance, the speed appropriate to the particular weight must be used.

Takeoff:	
Normal Climb Out	65-75 KIAS
Maximum Performance Takeoff, Speed at 50 Feet	62 KIAS
Enroute Climb, Flaps and Gear Up:	
Normal	85-100 KIAS
Best Rate of Climb, Sea Level	82 KIAS
Best Rate of Climb, 10,000 Feet	79 KIAS
Best Angle of Climb, Sea Level	67 KIAS
Best Angle of Climb, 10,000 Feet	73 KIAS
Landing Approach:	
Normal Approach, Flaps Up	70-80 KIAS
Normal Approach, Flaps 30°	60-70 KIAS
Short Field Approach, Flaps 30°	63 KIAS
Balked Landing:	
During Transition to Maximum Power, Flaps 20°	65 KIAS
Maximum Recommended Turbulent Air Penetration Speed:	
2800 Lbs	113 KIAS
2400 Lbs	105 KIAS
2000 Lbs	96 KIAS
Maximum Demonstrated Crosswind Velocity:	
Takeoff or Landing	16 KNOTS

AEROCCIDENTE
Escuela de Aviación

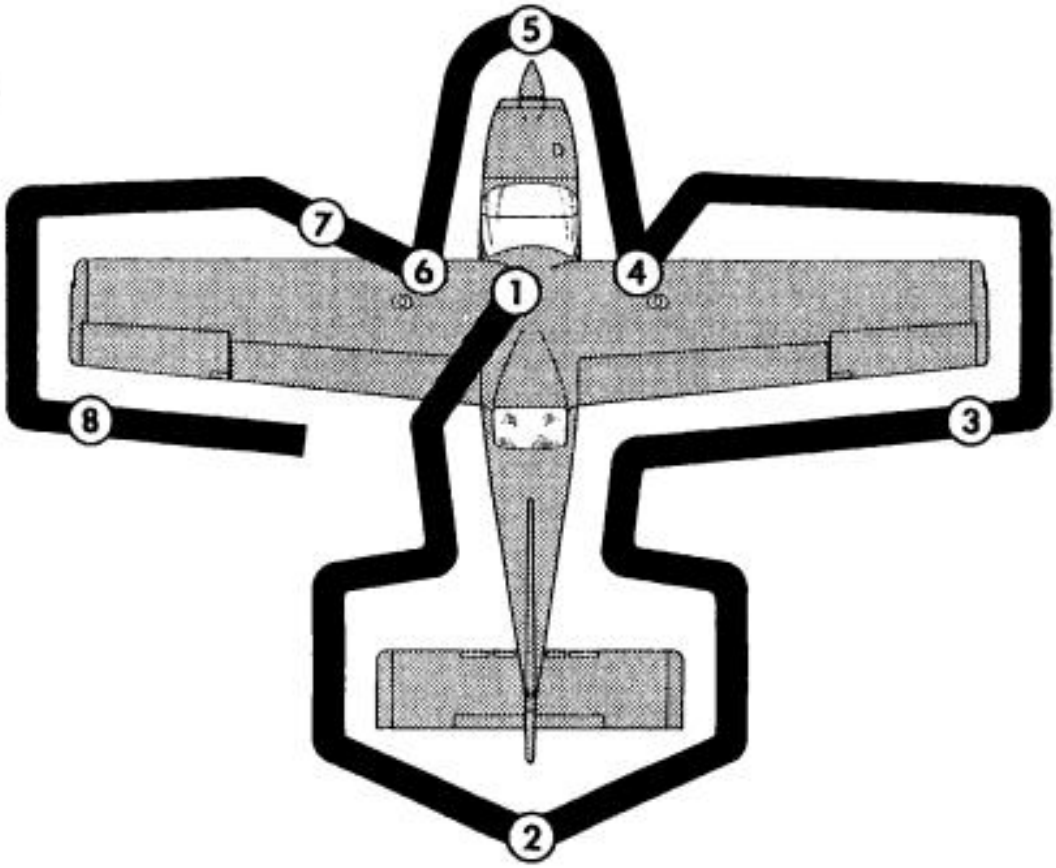

NOTE

Visually check airplane for general condition during walk-around inspection. In cold weather, remove even small accumulations of frost, ice or snow from wing, tail and control surfaces. Also, make sure that control surfaces contain no internal accumulations of ice or debris. If a night flight is planned, check operation of all lights, and make sure a flashlight is available.

Figure 4-1. Preflight Inspection

AEROCCIDENTE
Escuela de Aviación

CHECKLIST PROCEDURES

PREFLIGHT INSPECTION

(1) CABIN

(1) Landing Gear Lever -- DOWN.
(2) Control Wheel Lock -- REMOVE.
(3) Ignition Switch -- OFF.
(4) Master Switch -- ON.
(5) Fuel Quantity Indicators -- CHECK QUANTITY.
(6) Landing Gear Position Indicator Light (green) -- ILLUMINATED.
(7) Master Switch -- OFF.
(8) Fuel Selector Valve -- BOTH.
(9) Before the first flight of the day and after each refueling, pull forward on fuel reservoir drain lever (under pilot's seat) for about four seconds to clear fuel system of possible water and sediment. After draining, make sure that reservoir drains are closed. If water is observed in this check, the system may contain additional water. Check the fuel tank sump quick-drain valves for presence of water, and remove the fuel vent line drain plugs (in wing roots just outboard of cabin doors) and the fuel selector valve drain plug to check for presence of water.
(10) Baggage Door -- CHECK for security.

(2) EMPENNAGE

(1) Rudder Gust Lock -- REMOVE.
(2) Tail Tie-Down -- DISCONNECT.
(3) Control Surfaces -- CHECK freedom of movement and security.

(3) RIGHT WING Trailing Edge

(1) Aileron -- CHECK freedom of movement and security.
(2) Fuel Tank Vent Opening (at wing tip trailing edge) -- CHECK for stoppage.

(4) RIGHT WING

(1) Wing Tie-Down -- DISCONNECT.
(2) Main Wheel Tire -- CHECK for proper inflation.
(3) Before first flight of day and after each refueling, use sampler cup and drain small quantity of fuel from fuel tank sump quick-drain

AEROCCIDENTE
Escuela de Aviación

valve to check for water, sediment, and proper fuel grade(green).
(4) Fuel Quantity -- CHECK VISUALLY for desired level.
(5) Fuel Filler Cap -- SECURE and vent unobstructed.

(5) NOSE

(1) Engine Oil Level -- CHECK, do not operate with less than six quarts. Fill to eight quarts for extended flight.
(2) Propeller and Spinner -- CHECK for nicks, security and oil leaks.
(3) Induction Air Filter -- CHECK for restrictions by dust or other foreign matter.
(4) Landing and Taxi Lights -- CHECK for condition and cleanliness.
(5) Nose Wheel Strut and Tire -- CHECK for proper inflation.
(6) Nose Tie-Down -- DISCONNECT.
(7) Static Source Openings (both sides of fuselage) -- CHECK for stoppage.

(6) LEFT WING

(1) Main Wheel Tire -- CHECK for proper inflation.
(2) Before first flight of the day and after each refueling use sampler cup and drain small quantity of fuel from fuel tank sump quick-drain valve to check for water, sediment, and proper fuel grade (green).
(3) Fuel Quantity -- CHECK VISUALLY for desired level.
(4) Fuel Filler Cap -- SECURE and vent unobstructed.

(7) LEFT WING Leading Edge

(1) Stall Warning Vane -- CHECK for freedom of movement while master switch is momentarily turned on (horn should sound when vane is pushed upward).
(2) Pitot Tube Cover -- REMOVE and check opening for stoppage.
(3) Wing Tie-Down -- DISCONNECT.

(8) LEFT WING Trailing Edge

(1) Fuel Tank Vent Opening (at wing tip trailing edge) -- CHECK for stoppage.
(2) Aileron -- CHECK freedom of movement and security.

BEFORE STARTING ENGINE

(1) Preflight Inspection -- COMPLETE.
(2) Seats, Belts, Shoulder Harnesses -- ADJUST and LOCK.
(3) Fuel Selector Valve -- BOTH.

AEROCCIDENTE
Escuela de Aviación

(4) Radios, Autopilot, Electrical Equipment -- OFF.
(5) Brakes -- TEST and SET.
(6) Cowl Flaps -- OPEN (move lever out of locking hole to reposition).
(7) Landing Gear Lever -- DOWN.
(8) Circuit Breakers -- CHECK IN.

STARTING ENGINE

(1) Mixture -- IDLE CUT-OFF.
(2) Propeller -- HIGH RPM.
(3) Throttle -- OPEN 1/4 INCH.
(4) Master Switch -- ON.
(5) Auxiliary Fuel Pump -- ON.
(6) Mixture -- ADVANCE to 6 GAL/HR; then RETARD to IDLE CUT-OFF.

NOTE

If engine is warm, omit priming procedure above.

(7) Propeller Area -- CLEAR.
(8) Ignition Switch -- START (release when engine starts).
(9) Mixture -- RICH (ADVANCE smoothly when engine fires).

NOTE

If engine floods, turn off auxiliary fuel pump, place mixture in idle cut-off, open throttle 1/2, and crank engine. When engine fires, advance mixture to full rich and retard throttle promptly.

(10) Oil Pressure -- CHECK.
(11) Auxiliary Fuel Pump -- OFF.

BEFORE TAKEOFF

(1) Parking Brake -- SET.
(2) Cabin Doors -- CLOSED and LOCKED.
(3) Flight Controls -- FREE and CORRECT.
(4) Stabilator and Rudder Trim -- TAKEOFF.
(5) Fuel Selector Valve -- BOTH.
(6) Throttle -- 1800 RPM.
a. Magnetos -- CHECK (RPM drop should not exceed 150 RPM on either magneto or 50 RPM differential between magnetos).

AEROCCIDENTE
Escuela de Aviación

b. Propeller -- CYCLE from high to low RPM; return to high RPM.
c. Engine Instruments and Ammeter -- CHECK.
d. Suction Gage -- CHECK.

(7) Flight Instruments and Radios -- SET.
(8) Navigation Lights, Flashing Beacon and Strobe (if installed) Lights -- ON (as required).
(9) Throttle Friction Lock -- ADJUST.
(10) Wing Flaps -- 0°-10°.

TAKEOFF

NORMAL TAKEOFF

(1) Wing Flaps -- 0°-10° (10° preferred).
(2) Power -- FULL THROTTLE and 2700 RPM.
(3) Mixture -- RICH (lean for field elevation per fuel flow placard above 3000 feet).
(4) Stabilator Control -- LIFT NOSE WHEEL at 55 KIAS.
(5) Climb Speed -- 65-75 KIAS.
(6) Brakes -- APPLY momentarily when airborne.
(7) Landing Gear -- RETRACT in climb out.
(8) Wing Flaps -- RETRACT (if extended).

MAXIMUM PERFORMANCE TAKEOFF

(1) Wing Flaps -- 10°.
(2) Brakes -- APPLY.
(3) Power -- FULL THROTTLE and 2700 RPM.
(4) Mixture -- RICH (lean for field elevation per fuel flow placard above 3000 feet).
(5) Brakes -- RELEASE.
(6) Stabilator Control -- LIFT NOSE WHEEL at 50 KIAS.
(7) Climb Speed -- 62 KIAS until all obstacles are cleared.
(8) Brakes -- APPLY momentarily when airborne.
(9) Landing Gear -- RETRACT after obstacles are cleared.
(10) Wing Flaps -- RETRACT after reaching 70 KIAS.

NOTE

Do not reduce power until landing gear and wing flaps have been retracted.

AEROCCIDENTE
Escuela de Aviación

ENROUTE CLIMB

NORMAL CLIMB

(1) Airspeed -- 85-100 KIAS.
(2) Power -- 25 INCHES Hg or FULL THROTTLE and 2500 RPM.
(3) Mixture -- LEANED to 13 GAL/HR (with full throttle, lean 2 GPH less than maximum power mixture placard).
(4) Cowl Flaps -- OPEN as required.

MAXIMUM PERFORMANCE CLIMB

(1) Airspeed -- 82 KIAS at sea level to 79 KIAS at 10,000 feet.
(2) Power -- FULL THROTTLE and 2700 RPM.
(3) Mixture -- LEAN per fuel flow placard.
(4) Cowl Flaps -- FULL OPEN.

CRUISE

(1) Power -- 15-25 INCHES Hg, 2100 - 2500 RPM (no more than 75%).
(2) Mixture -- LEAN per Cessna Power Computer or data on page 4-17.
(3) Cowl Flaps -- CLOSED.

DESCENT

(1) Power -- AS DESIRED.

NOTE

Avoid continuous operation between 1400 and 1750 RPM with less than 10 inches Hg.

(2) Mixture -- ADJUST for smooth operation.
(3) Cowl Flaps -- CLOSED.
(4) Wing Flaps -- AS DESIRED (0°-10° below 130 KIAS, 10°-30° below 95 KIAS).
(5) Landing Gear -- AS DESIRED (do not extend above 125 KIAS).

AEROCCIDENTE
Escuela de Aviación

BEFORE LANDING

(1) Seats, Belts, Harnesses -- ADJUST and LOCK.
(2) Fuel Selector Valve -- BOTH.
(3) Landing Gear -- EXTEND below 125 KIAS.
(4) Mixture -- RICH.
(5) Propeller -- HIGH RPM.
(6) Airspeed -- 70-80 KIAS (flaps UP).
(7) Wing Flaps -- AS DESIRED (0°- 10° below 130 KIAS, 10°- 30° below 95 KIAS).
(8) Airspeed -- 60-70 KIAS (flaps DOWN).
(9) Stabilator and Rudder Trim -- ADJUST.

BALKED LANDING

(1) Power -- FULL THROTTLE and 2700 RPM.
(2) Wing Flaps -- RETRACT to 20°.
(3) Airspeed -- 65 KIAS.
(4) Wing Flaps -- RETRACT slowly.
(5) Cowl Flaps -- OPEN.

NORMAL LANDING

(1) Touchdown -- MAIN WHEELS FIRST.
(2) Landing Roll -- LOWER NOSE WHEEL GENTLY.
(3) Braking -- MINIMUM REQUIRED.

AFTER LANDING

(1) Wing Flaps -- UP.
(2) Cowl Flaps -- OPEN.

SECURING AIRPLANE

(1) Parking Brake -- SET.
(2) Radios, Electrical Equipment -- OFF.
(3) Mixture -- IDLE CUT-OFF (pulled full out).
(4) Ignition and Master Switches -- OFF.
(5) Control Lock -- INSTALL.
(6) Fuel Selector Valve -- LEFT or RIGHT.

AEROCCIDENTE
Escuela de Aviación

AMPLIFIED PROCEDURES

STARTING ENGINE

In cold weather, the engine compartment temperature drops off rapidly following engine shutdown and the injector nozzle lines remain nearly full of fuel. Cold weather starting procedures are therefore relatively simple with highly predictable results. However, in extremely hot weather, engine compartment temperatures increase rapidly following engine shutdown, and fuel in the lines will vaporize and escape into the intake manifold.

Hot weather starting procedures depend considerably on how soon the next engine start is attempted. Within the first 20 to 30 minutes after shutdown, the fuel manifold is adequately primed and the empty injector nozzle lines will fill before the engine dies. However, after approximately 30 minutes, the vaporized fuel in the manifold will have nearly dissipated and some slight "priming" could be required to refill the nozzle lines and keep the engine running after the initial start. Starting a hot engine is facilitated by advancing the mixture control promptly to 1/3 open when the engine fires, and then smoothly to full rich as power develops.

Should the engine tend to die after starting, turn on auxiliary fuel pump temporarily and adjust throttle as necessary to keep the engine running.

In the event of over-priming or flooding, turn off the auxiliary fuel pump, open the throttle from 1/2 to full open and continue cranking with the mixture full lean. When the engine fires, smoothly advance the mixture control to full rich and retard the throttle to desired idle speed.

If the engine is underprimed (most likely in cold weather with a cold engine) it will not fire at all, and additional priming will be necessary.

After starting, if the oil pressure gage does not begin to show pressure within 30 seconds in the summertime and about twice that long in very cold weather, stop the engine and investigate. Lack of oil pressure can cause serious engine damage.

NOTE

Additional details concerning cold weather starting and operation may be found under COLD WEATHER OPERATION paragraphs in this section.

AEROCCIDENTE
Escuela de Aviación

TAXIING

When taxiing it is important that speed and use of brakes be held to a minimum and that all controls be utilized (see Taxiing Diagram, Figure 4-2) to maintain directional control and balance. Taxiing over loose gravel or cinders should be done at low engine speed to avoid abrasion and stone damage to the propeller tips.

BEFORE TAKEOFF

WARM-UP

Since the engine is closely cowled for efficient in-flight engine cooling, precautions should be taken to avoid overheating during prolonged engine operation on the ground. Also, long periods of idling at low RPM may cause fouled spark plugs. If the engine accelerates smoothly, the airplane is ready for takeoff.

MAGNETO CHECK

The magneto check should be made at 1800 RPM as follows: Move the ignition switch first to R position, and note RPM. Next move switch back to BOTH to clear the other set of plugs. Then move switch to L position, note RPM and return the switch to the BOTH position. The RPM drop should not exceed 150 RPM on either magneto or show greater than 50 RPM differential between magnetos. A smooth drop off past normal is usually a sign of a too lean or too rich mixture. If there is a doubt concerning operation of the ignition system, RPM checks at a leaner mixture setting or at higher engine speeds will usually confirm whether a deficiency exists.

An absence of RPM drop may be an indication of faulty grounding of one side of the ignition system or should be cause for suspicion that the magneto timing is set in advance of the setting specified.

ALTERNATOR CHECK

Prior to flights where verification of proper alternator and voltage regulator operation is essential (such as night or instrument flights), a positive verification can be made by loading the electrical system momentarily (3 to 5 seconds) with the landing light or by operating the wing flaps during the engine runup (1800 RPM). The ammeter will remain within a needle width of the initial reading if the alternator and voltage regulator are operating properly.

AEROCCIDENTE
Escuela de Aviación

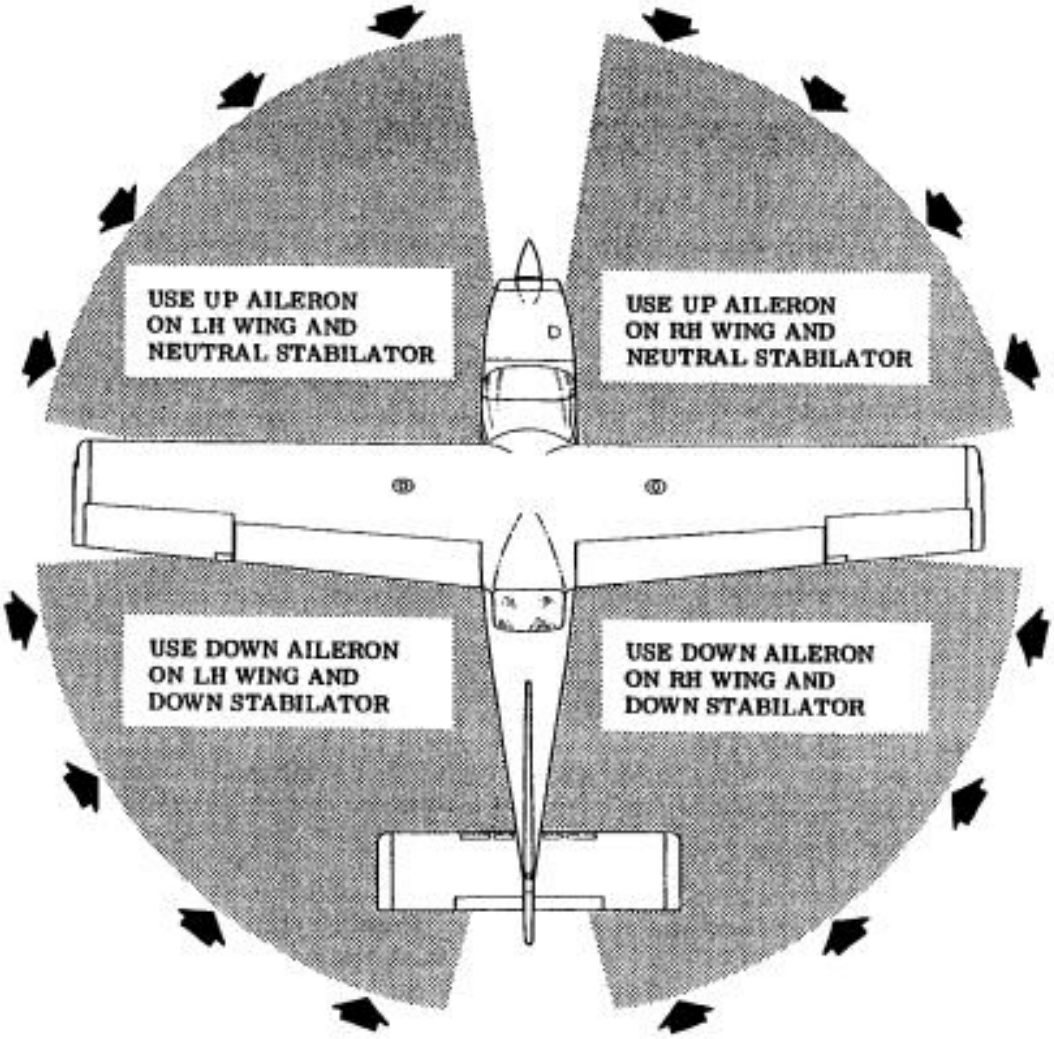

CODE	NOTE
WIND DIRECTION ➧	Strong quartering tail winds require caution. Avoid sudden bursts of the throttle and sharp braking when the airplane is in this attitude. Use the steerable nose wheel and rudder to maintain direction.

Figure 4-2. Taxiing Diagram

AEROCCIDENTE
Escuela de Aviación

TAKEOFF

POWER CHECK

It is important to check full-throttle engine operation early in the takeoff run. Any sign of rough engine operation or sluggish engine acceleration is good cause for discontinuing the takeoff.

The auxiliary fuel pump is normally off during takeoffs. However, if there is evidence of fuel vapor, as indicated by fluctuation of the fuel flow indicator needle, or rough engine operation, the pump should be turned on. It is not necessary to readjust the mixture control when operating with the auxiliary fuel pump turned on because the mixture is only slightly enrichened.

Full-throttle runups over loose gravel are especially harmful to propeller tips. When takeoffs must be made over a gravel surface, it is very important that the throttle be advanced slowly. This allows the airplane to start rolling before high RPM is developed, and the gravel will be blown back of the propeller rather than pulled into it. When unavoidable small dents appear in the propeller blades, they should be corrected immediately as described in Section 8 under Propeller Care.

Prior to takeoff from fields above 3000 feet elevation, the mixture should be leaned in accordance with the maximum power fuel flow placard located on the instrument panel control pedestal.

After full throttle is applied, adjust the throttle friction lock clockwise to prevent the throttle from creeping back from a maximum power position. Similar friction lock adjustments should be made as required in other flight conditions to maintain a fixed throttle setting.

WING FLAP SETTINGS

Takeoffs are accomplished with the wing flaps set in the 0° to 10° position. The preferred flap setting for normal takeoff is 10°. This flap setting (in comparison to flaps up) produces an approximate 15% shorter ground run and total takeoff distance over an obstacle. In addition, it provides easier lift-off and increased visibility over the nose in the initial climb-out.

Flap settings greater than 10° are not approved for takeoff.

AEROCCIDENTE
Escuela de Aviación

LANDING GEAR RETRACTION

Since the landing gear swings downward approximately one foot as it starts the retraction cycle, retraction should be avoided until well clear of the runway and after a positive climb is established. This is especially important when attempting a short field takeoff, where a premature lift-off might result in the airplane settling back onto the ground. On long runways the landing gear retraction can be delayed until reaching the point over the runway where a wheels-down forced landing on that runway would be impractical.

Before retracting the landing gear, the brakes should be applied momentarily to stop wheel rotation. Centrifugal force caused by the rapidly spinning wheel expands the diameter of the tire. If there is an accumulation of mud or ice in the wheel wells, the rotating wheel may rub as it is retracted into the wheel well.

CROSSWIND TAKEOFF

Takeoffs into strong crosswinds normally are performed with the minimum flap setting necessary for the field length to minimize the drift angle immediately after takeoff. The airplane is accelerated to a speed slightly higher than normal, and then pulled off abruptly to prevent possible settling back to the runway while drifting. When clear of the ground, make a coordinated turn into the wind to correct for drift.

ENROUTE CLIMB

Normal climbs are performed with landing gear and flaps retracted at airspeeds 5 to 15 knots higher than best rate-of-climb speed, and with reduced power (down to 25 inches of manifold pressure and 2500 RPM) for an optimum combination of performance, visibility and increased passenger comfort due to lower noise level. The mixture may be left full rich as long as the engine is smooth. However, for optimum power and climb economy with 25 inches of manifold pressure and 2500 RPM, set the mixture to 13 GPH. With full throttle and 2500 RPM, set the mixture to 2 GPH less than shown in the maximum power mixture placard.

Best rate of climb is achieved with full throttle and 2700 RPM with the mixture leaned for altitude in accordance with the maximum power fuel flow placard.

If an enroute obstacle dictates the use of a steep climb angle, the best angle of climb speed should be used with landing gear and flaps retracted and maximum power.

AEROCCIDENTE
Escuela de Aviación

CRUISE

Normal cruising is performed between 55% and 75% power. The corresponding power settings and fuel consumption for various altitudes can be determined by using your Cessna Power Computer or the data in Section 5.

NOTE

Cruising should be done at 65% to 75% power until a total of 50 hours has accumulated or oil consumption has stabilized. This is to ensure proper seating of the rings and is applicable to new engines, and engines in service following cylinder replacement or top overhaul of one or more cylinders.

The Cruise Performance Table, Figure 4-3, illustrates the true airspeed and nautical miles per gallon during cruise for various altitudes and percent power. This table should be used as a guide, along with the available winds aloft information, to determine the most favorable altitude and power setting for a given trip. The selection of cruise altitude on the basis of the most favorable wind conditions and the use of low power settings are significant factors that should be considered on every trip to reduce fuel consumption.

For reduced noise levels, it is desirable to select the lowest RPM in the green arc range for a given percent power that will provide smooth engine operation. The cowl flaps should be opened, if necessary, to maintain the cylinder head temperature at approximately three-fourths of the normal operating range (green arc).

Cruise performance data in this handbook and on the power computer

	75% POWER		65% POWER		55% POWER	
ALTITUDE	KTAS	NMPG	KTAS	NMPG	KTAS	NMPG
4000 Feet	144	13.3	135	14.4	126	15.6
7000 Feet	148	13.7	139	14.8	130	16.0
10,000 Feet	- - -	- - -	143	15.2	133	16.4
Standard Conditions						Zero Wind

Figure 4-3. Cruise Performance Table

AEROCCIDENTE
Escuela de Aviación

MIXTURE DESCRIPTION	EXHAUST GAS TEMPERATURE
RECOMMENDED LEAN (Pilots Operating Handbook and Power Computer)	Peak EGT Minus 25°F (Enrichen)
BEST ECONOMY	Peak EGT

Figure 4-4. EGT Table

is based on the recommended lean mixture setting. For best economy at 75% power or less, the engine may be operated at one-half gallon per hour leaner than shown in this handbook and on the power computer. This will result in approximately 4% greater range than shown in this handbook accompanied by approximately a 2 knot decrease in speed.

The fuel injection system used on this engine is considered to be non-icing. In the event the main intake filter becomes blocked, an alternate intake valve opens automatically, supplying unfiltered air from the lower engine compartment and resulting in a 5% power loss at full throttle.

LEANING WITH A CESSNA ECONOMY MIXTURE INDICATOR (EGT)

Exhaust gas temperature (EGT) as shown on the optional Cessna Economy Mixture Indicator may be used as an aid for mixture leaning in cruising flight at 75% power or less. To adjust the mixture, using this indicator, lean to establish the peak EGT as a reference point and then enrichen the mixture by the desired increment based on Figure 4-4.

As noted in this table, operation at peak EGT provides best fuel economy. This results in approximately 4% greater range than shown in the cruise tables of this handbook accompanied by approximately a 2 knot decrease in speed.

When leaning the mixture, under some conditions, engine roughness may occur before peak EGT is reached. In this case, use the EGT corresponding to the onset of roughness as the reference point instead of peak EGT. Any change in altitude or power will require a recheck of EGT indication.

STALLS

The stall characteristics are conventional and aural warning is pro-

AEROCCIDENTE
Escuela de Aviación

vided by a stall warning horn which sounds between 5 and 10 knots above the stall in all configurations.

BEFORE LANDING

The landing gear is normally extended before entering the traffic pattern. This practice will allow more time to confirm that the landing gear is down and locked. As a further precaution, the landing gear may be left extended in go-around procedures or traffic patterns for touch-and-go landings.

Landing gear extension can be detected by illumination of the gear DWN indicator light (green), absence of a gear warning horn with the throttle retarded below approximately 12 inches of manifold pressure, and visual inspection of the main gear position.

LANDING

Normal landing approaches can be made with power on or power off and at any flap setting. Surface winds and air turbulence are usually the primary factors in determining the most comfortable approach speeds. Slips are permitted with any desired flap setting. Actual touchdown should be made with power off and on the main wheels first. The nose wheel should be lowered smoothly to the runway as speed is diminished.

Full down stabilator (control wheel positioned full forward) should not be used during the ground roll. This reduces the weight on the main wheels which causes poor braking and increases the possibility of sliding the tires.

SHORT FIELD LANDING

For a maximum performance short field landing in smooth air conditions, make an approach at the minimum recommended airspeed with full flaps using enough power to control the glide path. (Slightly higher approach speeds should be used under turbulent air conditions.) After all approach obstacles are cleared, progressively reduce power and maintain the approach speed by lowering the nose of the airplane. Touchdown should be made with power off and on the main wheels first. Immediately after touchdown, lower the nose wheel and apply heavy braking as required. For maximum brake effectiveness, retract the flaps, hold the control wheel full back, and apply maximum brake pressure without sliding the tires.

AEROCCIDENTE
Escuela de Aviación

CROSSWIND LANDING

When landing in a strong crosswind, use the minimum flap setting required for the field length. Although the crab or combination method of drift correction may be used, the wing-low method gives the best control. After touchdown, hold a straight course with the steerable nose wheel and occasional braking if necessary.

BALKED LANDING

In a balked landing (go-around) climb, apply full throttle and 2700 RPM smoothly, and reduce wing flaps promptly to 20°. Upon reaching a safe airspeed, flaps should be slowly retracted to the full up position.

If obstacles are immediately ahead during the go-around, the landing gear should be left down and the wing flaps should be left at 20° until obstacles are cleared. At field elevations above 3000 feet, the mixture should be leaned for maximum power.

COLD WEATHER OPERATION

STARTING

Prior to starting on a cold morning, it is advisable to pull the propeller through several times by hand to "break loose" or "limber" the oil, thus conserving battery energy.

NOTE

When pulling the propeller through by hand, treat it as if the ignition switch is turned on. A loose or broken ground wire on either magneto could cause the engine to fire.

In extremely cold (-30°C and lower) weather, the use of an external preheater and an external power source are recommended whenever possible to obtain positive starting and to reduce wear and abuse to the engine and the electrical system. Pre-heat will thaw the oil trapped in the oil cooler, which probably will be congealed prior to starting in extremely cold temperatures. When using an external power source, the position of the master switch is important. Refer to Section 7, paragraph Ground Service Plug Receptacle, for operating details.

Cold weather starting procedures are the same as the normal starting procedures. Use caution to prevent inadvertent forward movement of the airplane during starting when parked on snow or ice.

AEROCCIDENTE
Escuela de Aviación

NOTE

If the engine does not start during the first few attempts, or if engine firing diminishes in strength, it is probable that the spark plugs have been frosted over. Preheat must be used before another start is attempted.

During cold weather operations, no indication will be apparent on the oil temperature gage prior to takeoff if outside air temperatures are very cold. After a suitable warm-up period (2 to 5 minutes at 1000 RPM), accelerate the engine several times to higher engine RPM. If the engine accelerates smoothly and the oil pressure remains normal and steady, the airplane is ready for takeoff.

HOT WEATHER OPERATION

The general warm temperature starting information in this section is appropriate. Avoid prolonged engine operation on the ground.

NOISE ABATEMENT

Increased emphasis on improving the quality of our environment requires renewed effort on the part of all pilots to minimize the effect of airplane noise on the public.

We, as pilots, can demonstrate our concern for environmental improvement, by application of the following suggested procedures, and thereby tend to build public support for aviation:

(1) Pilots operating aircraft under VFR over outdoor assemblies of persons, recreational and park areas, and other noise-sensitive areas should make every effort to fly not less than 2000 feet above the surface, weather permitting, even though flight at a lower level may be consistent with the provisions of government regulations.
(2) During departure from or approach to an airport, climb after takeoff and descent for landing should be made so as to avoid prolonged flight at low altitude near noise-sensitive areas.

NOTE

The above recommended procedures do not apply where they would conflict with Air Traffic Control clearances

AEROCCIDENTE
Escuela de Aviación

or instructions, or where, in the pilot's judgement, an altitude of less than 2000 feet is necessary for him to adequately exercise his duty to see and avoid other aircraft.

AEROCCIDENTE
Escuela de Aviación

SECTION 5
PERFORMANCE

TABLE OF CONTENTS

	Page
Introduction	5-3
Use of Performance Charts	5-3
Sample Problem	5-3
Takeoff	5-4
Cruise	5-5
Fuel Required	5-5
Landing	5-7
Figure 5-1, Airspeed Calibration - Normal Static Source	5-8
Airspeed Calibration - Alternate Static Source	5-9
Figure 5-2, Temperature Conversion Chart	5-10
Figure 5-3, Stall Speeds	5-11
Figure 5-4, Takeoff Distance - 2800 Lbs	5-12
Takeoff Distance - 2600 Lbs and 2400 Lbs	5-13
Figure 5-5, Rate of Climb.	5-14
Figure 5-6, Time, Fuel, and Distance to Climb - Maximum Rate of Climb	5-15
Time, Fuel, and Distance to Climb - Normal Climb	5-16
Figure 5-7, Cruise Performance - 2000 Feet	5-17
Cruise Performance - 4000 Feet	5-18
Cruise Performance - 6000 Feet	5-19
Cruise Performance - 8000 Feet	5-20
Cruise Performance - 10,000 Feet	5-21
Cruise Performance - 12,000 Feet	5-22
Figure 5-8, Range Profile	5-23
Figure 5-9, Endurance Profile	5-24
Figure 5-10, Landing Distance	5-25

AEROCCIDENTE
Escuela de Aviación

INTRODUCTION

Performance data charts on the following pages are presented so that you may know what to expect from the airplane under various conditions, and also, to facilitate the planning of flights in detail and with reasonable accuracy. The data in the charts has been computed from actual flight tests with the airplane and engine in good condition and using average piloting techniques.

It should be noted that the performance information presented in the range and endurance profile charts allows for 45 minutes reserve fuel based on 45% power. Fuel flow data for cruise is based on the recommended lean mixture setting. Some indeterminate variables such as mixture leaning technique, fuel metering characteristics, engine and propeller condition, and air turbulence may account for variations of 10% or more in range and endurance. Therefore, it is important to utilize all available information to estimate the fuel required for the particular flight.

USE OF PERFORMANCE CHARTS

Performance data is presented in tabular or graphical form to illustrate the effect of different variables. Sufficiently detailed information is provided in the tables so that conservative values can be selected and used to determine the particular performance figure with reasonable accuracy.

SAMPLE PROBLEM

The following sample flight problem utilizes information from the various charts to determine the predicted performance data for a typical flight. The following information is known:

AIRPLANE CONFIGURATION	
Takeoff weight	2700 Pounds
Usable fuel	60 Gallons
TAKEOFF CONDITIONS	
Field pressure altitude	1500 Feet
Temperature	28°C (16°C above standard)
Wind component along runway	12 Knot Headwind
Field length	3500 Feet

AEROCCIDENTE
Escuela de Aviación

CRUISE CONDITIONS	
Total distance	700 Nautical Miles
Pressure altitude	5500 Feet
Temperature	20°C (16°C above standard)
Expected wind enroute	10 Knot Headwind
LANDING CONDITIONS	
Field pressure altitude	2000 Feet
Temperature	25°C
Wind component along runway	6 Knot Headwind
Field length	3000 Feet

TAKEOFF

The takeoff distance chart, figure 5-4, should be consulted, keeping in mind that the distances shown are based on maximum performance techniques. Conservative distances can be established by reading the chart at the next higher value of weight, altitude and temperature. For example, in this particular sample problem, the takeoff distance information presented for a weight of 2800 lbs., a pressure altitude of 2000 feet and a temperature of 30°C should be used and results in the following:

Ground roll	1190 Feet
Total distance to clear a 50-foot obstacle	2140 Feet

A correction for the effect of wind may be made based on Note 4 of the takeoff chart. The distance correction for a 12 knot headwind is:

$$\frac{12 \text{ Knots}}{9 \text{ Knots}} \times 10\% = 13\% \text{ Decrease}$$

This results in the following distances, corrected for wind:

Ground roll, zero wind	1190
Decrease in ground roll (1190 feet x 13%)	155
Corrected ground roll	1035 Feet
Total distance to clear a 50-foot obstacle, zero wind	2140
Decrease in total distance (2140 feet x 13%)	278
Corrected total distance to clear 50-foot obstacle	1862 Feet

These distances are well within the takeoff field length quoted earlier for the sample problem.

AEROCCIDENTE
Escuela de Aviación

CRUISE

The cruising altitude and winds aloft information have been given for this flight. However, the power setting selection for cruise must be determined based on several considerations. These include the cruise performance characteristics of the airplane presented in figure 5-7, the range profile chart presented in figure 5-8, and the endurance profile chart presented in figure 5-9.

The range profile chart illustrates the relationship between power and range. Considerable fuel savings and longer range result when lower power settings are used.

For this sample problem, with a cruise altitude of 5500 feet, the range profile chart indicates that use of a 65% power setting yields a predicted range of 766 nautical miles under zero wind conditions. The endurance profile chart, figure 5-9, shows a corresponding 5.7 hours and, using this information, the estimated distance can be determined for the expected 10 knot headwind at 5500 feet as follows:

Range, zero wind	766
Decrease in range due to wind (5.7 hours x 10 knot headwind)	57
Corrected range	709 Nautical Miles

This indicates that the trip can be made without a fuel stop using approximately 65% power.

The cruise performance chart for 6000 feet pressure altitude (figure 5-7, sheet 3) is entered using 20°C above standard temperature. These values most nearly correspond to the expected altitude and temperature conditions. The power setting chosen is 2400 RPM and 22 inches of manifold pressure, which results in the following:

Power	65%
True airspeed	140 Knots
Cruise fuel flow	9.3 GPH

The power computer may be used to determine power and fuel consumption during flight.

FUEL REQUIRED

The total fuel requirement for the flight may be estimated using the performance information in figures 5-6 and 5-7. For this sample problem, figure 5-6 (using normal climb) shows that a climb from 2000 feet to

AEROCCIDENTE
Escuela de Aviación

6000 feet requires 1.6 gallons of fuel. The corresponding distance during the climb is 12 nautical miles. These values are for a standard temperature (as shown on the climb chart). The approximate effect of a non-standard temperature is to increase the time, fuel, and distance by 10% for each 10°C above standard temperature, due to the lower rate of climb. In this case, assuming a temperature 16°C above standard, the correction would be:

$$\frac{16^\circ C}{10^\circ C} \times 10\% = 16\% \text{ Increase}$$

With this factor included, the fuel estimate would be calculated as follows:

Fuel to climb, standard temperature	1.6
Increase due to non-standard temperature (1.6 x 16%)	0.3
Corrected fuel to climb	1.9 Gallons

In addition, the distance may be corrected for the non-standard temperature as follows:

Distance to climb, standard temperature	12
Increase due to non-standard temperature (12 nautical miles x 16%)	2
Corrected distance to climb	14 Nautical Miles

The resultant cruise distance is:

Total distance	700
Climb distance	-14
Cruise distance	686 Nautical Miles

With an expected 10 knot headwind, the ground speed for cruise is predicted to be:

140
-10
130 Knots

Therefore, the time required for the cruise portion of the trip is:

$$\frac{686 \text{ Nautical Miles}}{130 \text{ Knots}} = 5.3 \text{ Hours}$$

The fuel required for cruise is endurance times fuel consumption:

5.3 hours x 9.3 gallons/hour = 49.3 Gallons

AEROCCIDENTE
Escuela de Aviación

The total estimated fuel required is as follows:

Engine start, taxi, and takeoff	1.5
Climb	1.9
Cruise	49.3
Total fuel required	52.7 Gallons

This will leave a fuel reserve of:

$$\begin{array}{r} 60.0 \\ -52.7 \\ \hline 7.3 \text{ Gallons} \end{array}$$

Once the flight is underway, ground speed checks will provide a more accurate basis for estimating the time enroute and the corresponding fuel required to complete the trip with ample reserve.

LANDING

A procedure similar to the takeoff calculations should be used for estimating the landing distance at the destination airport. Figure 5-10 presents maximum performance technique landing distances for various airport altitude and temperature combinations. The distances corresponding to 2000 feet altitude and 30°C should be used and result in the following:

Ground roll	825 Feet
Total distance to clear a 50-foot obstacle	1480 Feet

A correction for wind may be made based on Note 2 of the landing chart. The distance correction for a 6 knot headwind is:

$$\frac{6 \text{ Knots}}{9 \text{ Knots}} \times 10\% = 7\% \text{ Decrease}$$

This results in the following wind-corrected figures:

Ground roll	767 Feet
Total distance over a 50-foot obstacle	1376 Feet

These distances are well within the landing field length quoted previously for this sample problem.

AEROCCIDENTE
Escuela de Aviación

AIRSPEED CALIBRATION

NORMAL STATIC SOURCE

FLAPS UP										
KIAS	- - -	60	70	80	90	100	110	120	130	140	150
KCAS	- - -	62	71	81	91	100	110	119	128	137	147
FLAPS 10°										
KIAS	50	60	70	80	90	100	110	120	130	- - -	- - -
KCAS	52	62	71	81	91	100	110	119	129	- - -	- - -
FLAPS 30°										
KIAS	40	50	60	70	80	90	95	- - -	- - -	- - -	- - -
KCAS	43	52	62	72	81	90	95	- - -	- - -	- - -	- - -

Figure 5-1. Airspeed Calibration (Sheet 1 of 2)

AEROCCIDENTE
Escuela de Aviación

AIRSPEED CALIBRATION
ALTERNATE STATIC SOURCE

HEATER/VENTS AND WINDOWS CLOSED

FLAPS UP												
NORMAL KIAS	- - -	- - -	60	70	80	90	100	110	120	130	140	150
ALTERNATE KIAS	- - -	- - -	61	72	82	92	102	113	123	133	142	152
FLAPS 10°												
NORMAL KIAS	- - -	50	60	70	80	90	100	110	120	130	- - -	- - -
ALTERNATE KIAS	- - -	49	61	72	83	94	104	113	122	131	- - -	- - -
FLAPS 30°												
NORMAL KIAS	40	50	60	70	80	90	95	- - -	- - -	- - -	- - -	- - -
ALTERNATE KIAS	40	52	63	74	84	94	98	- - -	- - -	- - -	- - -	- - -

HEATER/VENTS OPEN AND WINDOWS CLOSED

FLAPS UP												
NORMAL KIAS	- - -	- - -	60	70	80	90	100	110	120	130	140	150
ALTERNATE KIAS	- - -	- - -	59	70	81	91	101	111	121	131	141	151
FLAPS 10°												
NORMAL KIAS	- - -	50	60	70	80	90	100	110	120	130	- - -	- - -
ALTERNATE KIAS	- - -	48	60	71	82	93	102	111	120	129	- - -	- - -
FLAPS 30°												
NORMAL KIAS	40	50	60	70	80	90	95	- - -	- - -	- - -	- - -	- - -
ALTERNATE KIAS	38	50	62	73	83	92	97	- - -	- - -	- - -	- - -	- - -

Figure 5-1. Airspeed Calibration (Sheet 2 of 2)

AEROCCIDENTE
Escuela de Aviación

TEMPERATURE CONVERSION CHART

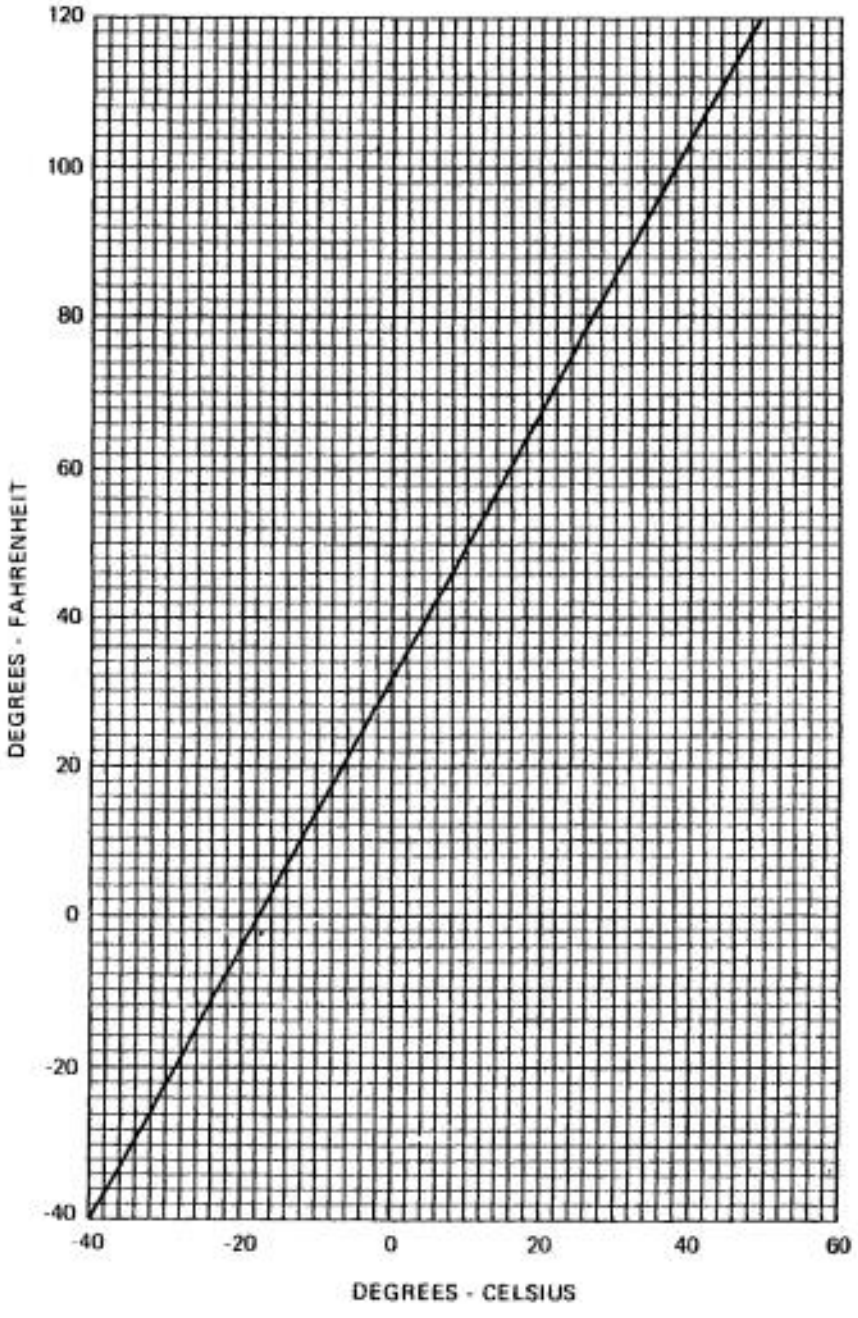

Figure 5-2. Temperature Conversion Chart

AEROCCIDENTE
Escuela de Aviación

STALL SPEEDS

CONDITIONS:
Power Off
Gear Up or Down

NOTES:
1. Maximum altitude loss during a stall recovery is approximately 190 feet.
2. KIAS values are approximate.

MOST REARWARD CENTER OF GRAVITY

WEIGHT LBS	FLAP DEFLECTION	ANGLE OF BANK							
		0°		30°		45°		60°	
		KIAS	KCAS	KIAS	KCAS	KIAS	KCAS	KIAS	KCAS
2800	UP	55	57	59	61	65	68	78	81
	10°	51	53	55	57	61	63	72	75
	30°	48	50	52	54	57	59	68	71

MOST FORWARD CENTER OF GRAVITY

WEIGHT LBS	FLAP DEFLECTION	ANGLE OF BANK							
		0°		30°		45°		60°	
		KIAS	KCAS	KIAS	KCAS	KIAS	KCAS	KIAS	KCAS
2800	UP	59	61	63	66	70	73	83	86
	10°	55	57	59	61	65	68	78	81
	30°	50	52	54	56	59	62	71	74

Figure 5-3. Stall Speeds

AEROCCIDENTE
Escuela de Aviación

TAKEOFF DISTANCE
MAXIMUM WEIGHT 2800 LBS

CONDITIONS:
Flaps 10°
2700 RPM and Full Throttle Prior to Brake Release
Mixture Set at Placard Fuel Flow
Cowl Flaps Open
Paved, Level, Dry Runway
Zero Wind

MIXTURE SETTING	
PRESS ALT	GPH
S.L.	17
2000	16
4000	15
6000	14
8000	13

NOTES:
1. Maximum performance technique as specified in Section 4.
2. Landing gear extended until takeoff obstacle is cleared.
3. Where distance value has been deleted, climb performance after lift-off is less that 150 fpm. Rate of climb is based on landing gear extended and flaps 10° at takeoff speed.
4. Decrease distances 10% for each 9 knots headwind. For operation with tailwinds up to 10 knots, increase distances by 10% for each 2 knots.
5. For operation on a dry, grass runway, increase distances by 15% of the "ground roll" figure.

WEIGHT LBS	TAKEOFF SPEED KIAS		PRESS ALT FT	0°C		10°C		20°C		30°C		40°C	
	LIFT OFF	AT 50 FT		GRND ROLL	TOTAL TO CLEAR 50 FT OBS	GRND ROLL	TOTAL TO CLEAR 50 FT OBS	GRND ROLL	TOTAL TO CLEAR 50 FT OBS	GRND ROLL	TOTAL TO CLEAR 50 FT OBS	GRND ROLL	TOTAL TO CLEAR 50 FT OBS
2800	58	62	S.L.	795	1420	860	1530	925	1645	995	1765	1065	1900
			1000	870	1555	935	1675	1010	1800	1085	1940	1170	2090
			2000	950	1705	1025	1835	1105	1980	1190	2140	1280	2310
			3000	1040	1875	1125	2025	1210	2185	1305	2365	1405	2565
			4000	1140	2065	1230	2240	1330	2425	1435	2630	1545	2860
			5000	1250	2290	1355	2485	1460	2700	1575	2945	1700	3215
			6000	1380	2550	1490	2780	1610	3030	1740	3315	1880	3645
			7000	1520	2855	1645	3125	1780	3430	1920	3780	---	---
			8000	1680	3225	1815	3550	1970	3925	---	---	---	---

Figure 5-4. Takeoff Distance (Sheet 1 of 2)

TAKEOFF DISTANCE

2600 LBS AND 2400 LBS

REFER TO SHEET 1 FOR APPROPRIATE CONDITIONS AND NOTES.

WEIGHT LBS	TAKEOFF SPEED KIAS		PRESS ALT FT	0°C		10°C		20°C		30°C		40°C	
	LIFT OFF	AT 50 FT		GRND ROLL	TOTAL TO CLEAR 50 FT OBS	GRND ROLL	TOTAL TO CLEAR 50 FT OBS	GRND ROLL	TOTAL TO CLEAR 50 FT OBS	GRND ROLL	TOTAL TO CLEAR 50 FT OBS	GRND ROLL	TOTAL TO CLEAR 50 FT OBS
2600	56	60	S.L.	670	1200	720	1290	775	1380	835	1480	895	1590
			1000	730	1310	785	1405	845	1510	910	1620	975	1740
			2000	795	1430	860	1535	925	1650	995	1775	1070	1915
			3000	870	1565	940	1685	1010	1815	1090	1955	1170	2110
			4000	955	1720	1030	1855	1110	2000	1195	2160	1285	2335
			5000	1045	1895	1130	2045	1220	2215	1315	2395	1415	2600
			6000	1150	2095	1240	2270	1340	2460	1445	2675	1560	2910
			7000	1265	2330	1365	2530	1475	2750	1595	3000	1720	3280
			8000	1395	2600	1510	2835	1630	3100	1760	3400	1900	3740
2400	54	57	S.L.	560	1005	600	1075	645	1150	695	1230	745	1320
			1000	605	1090	655	1170	705	1255	755	1345	810	1440
			2000	665	1190	715	1275	770	1370	825	1470	885	1575
			3000	725	1300	780	1395	840	1495	905	1610	970	1730
			4000	790	1420	855	1530	920	1645	990	1770	1065	1905
			5000	865	1560	935	1680	1010	1810	1085	1950	1165	2105
			6000	950	1715	1025	1850	1105	1995	1190	2155	1285	2335
			7000	1045	1895	1130	2045	1215	2215	1310	2400	1415	2605
			8000	1150	2100	1240	2275	1340	2470	1445	2685	1560	2920

Figure 5-4. Takeoff Distance (Sheet 2 of 2)

RATE OF CLIMB

CONDITIONS:
Flaps Up
Gear Up
2700 RPM
Full Throttle
Mixture Set at Placard Fuel Flow
Cowl Flaps Open

MIXTURE SETTING	
PRESS ALT	GPH
S. L.	17
4000	15
8000	13
12,000	10

WEIGHT LBS	PRESS ALT FT	CLIMB SPEED KIAS	RATE OF CLIMB - FPM			
			-20°C	0°C	20°C	40°C
2800	S.L.	82	1080	990	905	815
	2000	81	960	875	790	705
	4000	81	840	760	675	595
	6000	80	725	645	565	485
	8000	79	610	530	455	380
	10,000	79	495	420	350	- - -
	12,000	78	385	315	245	- - -

Figure 5-5. Rate of Climb

AEROCCIDENTE
Escuela de Aviación

TIME, FUEL, AND DISTANCE TO CLIMB

MAXIMUM RATE OF CLIMB

CONDITIONS:
Flaps Up
Gear Up
2700 RPM
Full Throttle
Mixture Set at Placard Fuel Flow
Cowl Flaps Open
Standard Temperature

MIXTURE SETTING	
PRESS ALT	GPH
S.L.	17
4000	15
8000	13
12,000	10

NOTES:
1. Add 1.5 gallons of fuel for engine start, taxi and takeoff allowance.
2. Increase time, fuel and distance by 10% for each 10°C above standard temperature.
3. Distances shown are based on zero wind.

WEIGHT LBS	PRESSURE ALTITUDE FT	TEMP °C	CLIMB SPEED KIAS	RATE OF CLIMB FPM	FROM SEA LEVEL		
					TIME MIN	FUEL USED GALLONS	DISTANCE NM
2800	S.L.	15	82	925	0	0	0
	1000	13	82	875	1	0.3	2
	2000	11	81	830	2	0.6	3
	3000	9	81	780	4	1.0	5
	4000	7	81	730	5	1.3	7
	5000	5	80	685	6	1.6	9
	6000	3	80	635	8	2.0	11
	7000	1	80	585	10	2.4	14
	8000	-1	79	535	11	2.8	17
	9000	-3	79	490	13	3.2	20
	10,000	-5	79	440	16	3.6	23
	11,000	-7	78	390	18	4.1	27
	12,000	-9	78	345	21	4.6	31

Figure 5-6. Time, Fuel, and Distance to Climb (Sheet 1 of 2)

AEROCCIDENTE
Escuela de Aviación

TIME, FUEL, AND DISTANCE TO CLIMB

NORMAL CLIMB - 90 KIAS

CONDITIONS:
Flaps Up
Gear Up
2500 RPM
25 Inches MP or Full Throttle
Cowl Flaps Open
Standard Temperature

MIXTURE SETTING	
PRESS ALT	GPH
S.L. to 4000	13
8000	11
12,000	8

NOTES:
1. Add 1.5 gallons of fuel for engine start, taxi and takeoff allowance.
2. Increase time, fuel and distance by 10% for each 10°C above standard temperature.
3. Distances shown are based on zero wind.

WEIGHT LBS	PRESSURE ALTITUDE FT	TEMP °C	RATE OF CLIMB FPM	FROM SEA LEVEL		
				TIME MIN	FUEL USED GALLONS	DISTANCE NM
2800	S.L.	15	550	0	0	0
	1000	13	550	2	0.4	3
	2000	11	550	4	0.8	6
	3000	9	550	5	1.2	8
	4000	7	550	7	1.6	11
	5000	5	500	9	2.0	14
	6000	3	445	11	2.4	18
	7000	1	395	14	2.9	22
	8000	-1	340	17	3.4	27
	9000	-3	295	20	3.9	32
	10,000	-5	245	24	4.6	39
	11,000	-7	200	28	5.2	47
	12,000	-9	150	34	6.1	58

Figure 5-6. Time, Fuel, and Distance to Climb (Sheet 2 of 2)

AEROCCIDENTE
Escuela de Aviación

CRUISE PERFORMANCE

PRESSURE ALTITUDE 2000 FEET

CONDITIONS:
Recommended Lean Mixture
2800 Pounds
Cowl Flaps Closed

		20°C BELOW STANDARD TEMP -9°C			STANDARD TEMPERATURE 11°C			20°C ABOVE STANDARD TEMP 31°C		
RPM	MP	% BHP	KTAS	GPH	% BHP	KTAS	GPH	% BHP	KTAS	GPH
2500	24	77	140	11.2	75	141	10.7	72	142	10.4
	23	73	137	10.5	71	138	10.1	68	138	9.8
	22	69	133	9.9	67	134	9.6	64	135	9.3
	21	65	130	9.3	62	131	9.0	60	132	8.8
2400	25	78	140	11.2	75	141	10.7	72	142	10.4
	24	73	137	10.5	71	138	10.2	69	139	9.8
	23	69	134	9.9	67	134	9.6	65	135	9.3
	22	65	130	9.4	63	131	9.1	61	132	8.8
2300	25	74	137	10.6	71	138	10.2	69	139	9.9
	24	70	134	10.0	67	135	9.7	65	136	9.4
	23	66	131	9.5	64	132	9.2	62	133	8.9
	22	62	128	9.0	60	128	8.7	58	129	8.4
2200	25	69	134	9.9	67	134	9.6	65	135	9.3
	24	66	131	9.4	63	131	9.1	61	132	8.9
	23	62	128	9.0	60	128	8.7	58	129	8.4
	22	58	125	8.5	56	125	8.2	55	126	8.0
2100	25	66	131	9.4	63	131	9.1	61	132	8.9
	24	62	128	9.0	60	128	8.7	58	129	8.4
	23	59	125	8.5	57	125	8.3	55	126	8.0
	22	55	122	8.1	53	122	7.8	51	123	7.6
	21	52	118	7.7	50	119	7.5	48	120	7.3
	20	48	115	7.3	46	116	7.1	45	116	6.9
	19	45	112	6.9	43	112	6.7	42	112	6.6

Figure 5-7. Cruise Performance (Sheet 1 of 6)

AEROCCIDENTE
Escuela de Aviación

CRUISE PERFORMANCE

PRESSURE ALTITUDE 4000 FEET

CONDITIONS:
Recommended Lean Mixture
2800 Pounds
Cowl Flaps Closed

		20°C BELOW STANDARD TEMP -13°C			STANDARD TEMPERATURE 7°C			20°C ABOVE STANDARD TEMP 27°C		
RPM	MP	% BHP	KTAS	GPH	% BHP	KTAS	GPH	% BHP	KTAS	GPH
2500	24	- - -	- - -	- - -	77	145	11.0	74	146	10.6
	23	75	141	10.8	73	142	10.4	70	142	10.1
	22	71	137	10.2	69	138	9.8	66	139	9.5
	21	67	134	9.6	64	135	9.3	62	136	9.0
2400	25	- - -	- - -	- - -	77	145	11.1	75	146	10.7
	24	76	141	10.9	73	142	10.5	71	143	10.1
	23	72	138	10.3	69	139	9.9	67	139	9.6
	22	67	134	9.7	65	135	9.3	63	136	9.1
2300	25	76	141	10.9	73	142	10.5	70	143	10.1
	24	72	138	10.3	69	139	9.9	67	140	9.6
	23	68	135	9.7	65	136	9.4	63	136	9.1
	22	64	131	9.2	62	132	8.9	60	133	8.6
2200	25	71	137	10.2	69	138	9.8	66	139	9.5
	24	67	134	9.7	65	135	9.3	63	136	9.1
	23	64	131	9.2	62	132	8.9	60	133	8.6
	22	60	128	8.7	58	129	8.5	56	130	8.2
2100	25	68	134	9.7	65	135	9.4	63	136	9.1
	24	64	131	9.2	62	132	8.9	60	133	8.7
	23	60	128	8.8	58	129	8.5	56	130	8.2
	22	57	125	8.3	55	126	8.0	53	127	7.8
	21	53	122	7.9	51	123	7.6	50	124	7.4
	20	50	119	7.5	48	120	7.3	46	120	7.1
	19	46	115	7.1	45	115	6.9	43	115	6.7

Figure 5-7. Cruise Performance (Sheet 2 of 6)

AEROCCIDENTE
Escuela de Aviación

CRUISE PERFORMANCE

PRESSURE ALTITUDE 6000 FEET

CONDITIONS:
Recommended Lean Mixture
2800 Pounds
Cowl Flaps Closed

		20°C BELOW STANDARD TEMP -17°C			STANDARD TEMPERATURE 3°C			20°C ABOVE STANDARD TEMP 23°C		
RPM	MP	% BHP	KTAS	GPH	% BHP	KTAS	GPH	% BHP	KTAS	GPH
2500	23	77	145	11.2	75	146	10.7	72	147	10.3
	22	73	142	10.5	71	142	10.1	68	143	9.8
	21	69	138	9.9	66	139	9.5	64	140	9.2
	20	65	134	9.3	62	135	9.0	60	136	8.7
2400	24	78	145	11.3	75	146	10.8	73	147	10.4
	23	74	142	10.6	71	143	10.2	69	144	9.8
	22	69	138	9.9	67	139	9.6	65	140	9.3
	21	65	135	9.4	63	136	9.1	61	137	8.8
2300	24	74	142	10.6	71	143	10.2	69	144	9.8
	23	70	139	10.0	67	140	9.6	65	140	9.3
	22	66	135	9.4	63	136	9.1	61	137	8.8
	21	62	132	8.9	59	133	8.6	57	134	8.4
2200	24	69	138	9.9	67	139	9.6	65	140	9.3
	23	66	135	9.4	63	136	9.1	61	137	8.8
	22	62	132	9.0	60	133	8.7	58	134	8.4
	21	58	129	8.5	56	130	8.2	54	131	8.0
2100	24	66	135	9.5	63	136	9.1	61	137	8.9
	23	62	132	9.0	60	133	8.7	58	134	8.4
	22	59	129	8.5	56	130	8.2	55	131	8.0
	21	55	126	8.1	53	127	7.8	51	128	7.6
	20	51	122	7.6	49	123	7.4	48	123	7.2
	19	48	119	7.2	46	119	7.0	44	119	6.9
	18	44	114	6.8	43	114	6.7	41	113	6.5

Figure 5-7. Cruise Performance (Sheet 3 of 6)

AEROCCIDENTE
Escuela de Aviación

CRUISE PERFORMANCE

PRESSURE ALTITUDE 8000 FEET

CONDITIONS:
Recommended Lean Mixture
2800 Pounds
Cowl Flaps Closed

		20°C BELOW STANDARD TEMP -21°C			STANDARD TEMPERATURE -1°C			20°C ABOVE STANDARD TEMP 19°C		
RPM	MP	% BHP	KTAS	GPH	% BHP	KTAS	GPH	% BHP	KTAS	GPH
2500	22	75	146	10.8	72	147	10.4	70	148	10.0
	21	71	142	10.2	68	143	9.8	66	144	9.5
	20	67	138	9.6	64	139	9.2	62	140	8.9
	19	62	135	9.0	60	135	8.7	58	136	8.4
2400	22	71	143	10.2	69	144	9.9	66	144	9.5
	21	67	139	9.6	65	140	9.3	62	141	9.0
	20	63	135	9.1	60	136	8.8	58	137	8.5
	19	58	131	8.5	56	132	8.2	54	133	8.0
2300	22	67	139	9.7	65	140	9.3	63	141	9.0
	21	63	136	9.1	61	137	8.8	59	138	8.6
	20	59	132	8.6	57	133	8.3	55	134	8.1
	19	55	128	8.1	53	129	7.9	51	130	7.6
2200	22	64	136	9.2	61	137	8.9	59	138	8.6
	21	60	133	8.7	58	134	8.4	56	135	8.2
	20	56	129	8.2	54	130	8.0	52	131	7.7
	19	53	126	7.8	51	127	7.6	49	127	7.4
2100	22	60	133	8.7	58	134	8.4	56	135	8.2
	21	57	130	8.3	55	130	8.0	53	132	7.8
	20	53	126	7.8	51	127	7.6	49	127	7.4
	19	49	123	7.4	47	123	7.2	46	123	7.0
	18	46	118	7.0	44	118	6.8	42	117	6.7

Figure 5-7. Cruise Performance (Sheet 4 of 6)

AEROCCIDENTE
Escuela de Aviación

CRUISE PERFORMANCE

PRESSURE ALTITUDE 10,000 FEET

CONDITIONS:
Recommended Lean Mixture
2800 Pounds
Cowl Flaps Closed

		20°C BELOW STANDARD TEMP -25°C			STANDARD TEMPERATURE -5°C			20°C ABOVE STANDARD TEMP 15°C		
RPM	MP	% BHP	KTAS	GPH	% BHP	KTAS	GPH	% BHP	KTAS	GPH
2500	20	69	143	9.8	66	144	9.5	64	145	9.2
	19	64	139	9.2	62	140	8.9	60	141	8.6
	18	60	135	8.6	57	136	8.4	55	137	8.1
	17	55	130	8.1	53	132	7.8	51	132	7.6
2400	20	65	139	9.3	62	140	9.0	60	141	8.7
	19	60	135	8.7	58	136	8.4	56	137	8.2
	18	56	131	8.2	54	132	7.9	52	133	7.7
	17	52	127	7.7	50	127	7.4	48	127	7.3
2300	20	61	136	8.8	59	137	8.5	57	138	8.3
	19	57	132	8.3	55	133	8.0	53	134	7.8
	18	53	128	7.8	51	129	7.6	49	129	7.4
	17	49	124	7.4	47	124	7.2	45	123	7.0
2200	20	58	133	8.4	56	134	8.2	54	135	7.9
	19	54	130	8.0	52	131	7.7	50	131	7.5
	18	50	126	7.5	49	126	7.3	47	126	7.1
	17	47	121	7.1	45	121	6.9	43	119	6.7
2100	20	55	130	8.0	52	131	7.7	51	131	7.6
	19	51	126	7.6	49	126	7.4	47	126	7.2
	18	47	122	7.2	45	122	7.0	44	120	6.8

Figure 5-7. Cruise Performance (Sheet 5 of 6)

AEROCCIDENTE
Escuela de Aviación

CRUISE PERFORMANCE

PRESSURE ALTITUDE 12,000 FEET

CONDITIONS:
Recommended Lean Mixture
2800 Pounds
Cowl Flaps Closed

		20°C BELOW STANDARD TEMP -29°C			STANDARD TEMPERATURE -9°C			20°C ABOVE STANDARD TEMP 11°C		
RPM	MP	% BHP	KTAS	GPH	% BHP	KTAS	GPH	% BHP	KTAS	GPH
2500	18	61	139	8.9	59	140	8.6	57	141	8.3
	17	57	135	8.3	55	136	8.0	53	136	7.8
	16	52	130	7.7	50	130	7.5	48	130	7.3
	15	47	124	7.2	46	124	7.0	44	122	6.8
2400	18	58	135	8.4	55	136	8.1	53	137	7.9
	17	53	131	7.8	51	132	7.6	49	132	7.4
	16	49	126	7.4	47	126	7.1	45	125	7.0
2300	18	54	132	8.0	52	133	7.7	51	133	7.5
	17	50	128	7.5	48	128	7.3	47	127	7.1
	16	46	123	7.1	45	122	6.9	43	119	6.7
2200	18	52	130	7.7	50	130	7.5	48	130	7.3
	17	48	125	7.3	46	125	7.1	45	123	6.9
2100	18	49	126	7.3	47	125	7.1	45	124	6.9
	17	45	120	6.9	43	119	6.7	42	116	6.6

Figure 5-7. Cruise Performance (Sheet 6 of 6)

AEROCCIDENTE
Escuela de Aviación

RANGE PROFILE
45 MINUTES RESERVE
50 GALLONS USABLE FUEL

CONDITIONS:
2800 Pounds
Recommended Lean Mixture for Cruise
Standard Temperature
Zero Wind

NOTES:
1. This chart allows for the fuel used for engine start, taxi, takeoff and climb, and the distance during a normal climb as shown in figure 5-6 (sheet 2).
2. Reserve fuel is based on 45 minutes at 45% BHP and is 5.2 gallons.

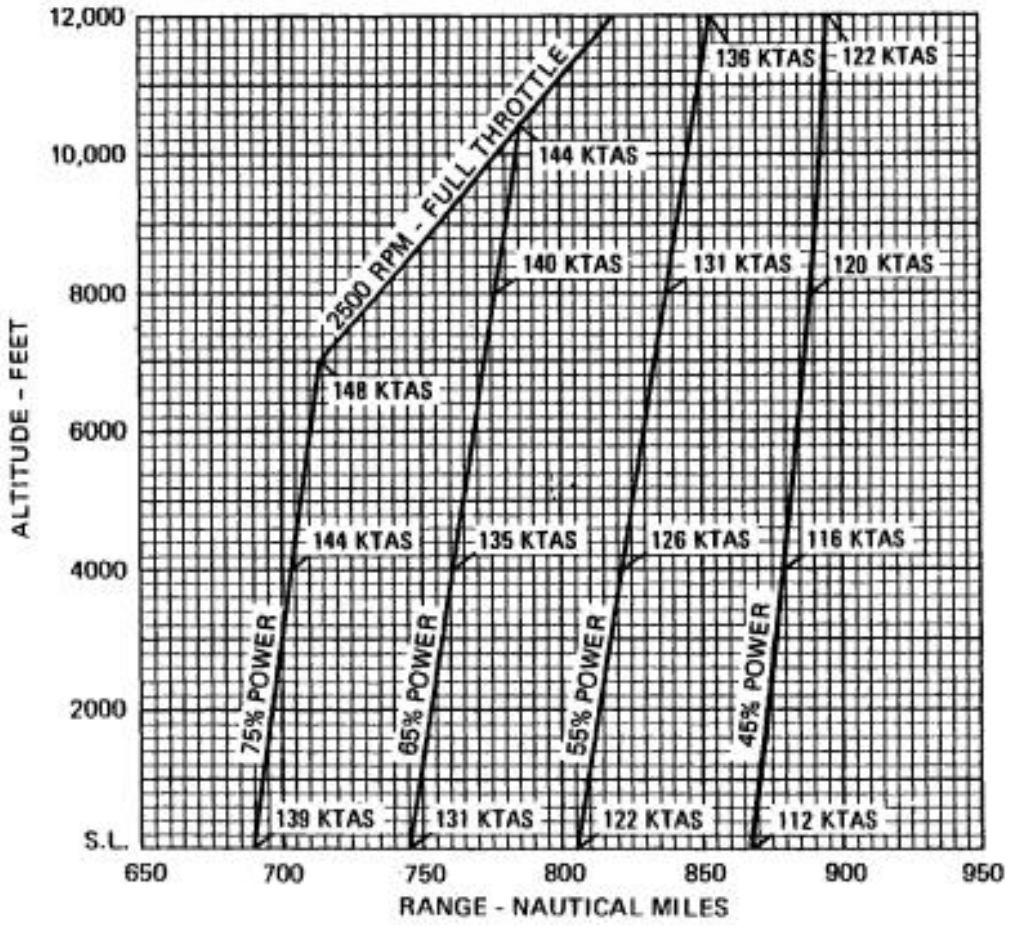

Figure 5-8. Range Profile

AEROCCIDENTE
Escuela de Aviación

ENDURANCE PROFILE

45 MINUTES RESERVE
50 GALLONS USABLE FUEL

CONDITIONS:
2800 Pounds
Recommended Lean Mixture for Cruise
Standard Temperature

NOTES:
1. This chart allows for the fuel used for engine start, taxi, takeoff and climb, and the time during a normal climb as shown in figure 5-6 (sheet 2).
2. Reserve fuel is based on 45 minutes at 45% BHP and is 5.2 gallons.

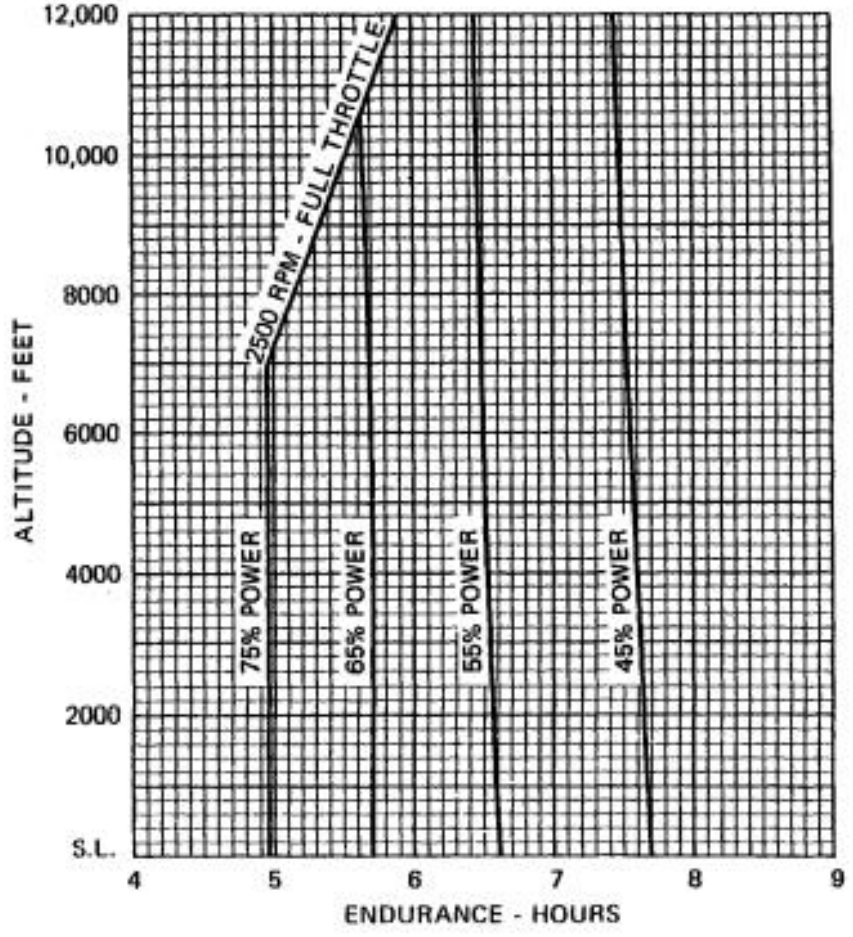

Figure 5-9. Endurance Profile

AEROCCIDENTE
Escuela de Aviación

LANDING DISTANCE

CONDITIONS:
Flaps 30°
Power Off
Maximum Braking
Paved, Level, Dry Runway
Zero Wind

NOTES:
1. Maximum performance technique as specified in Section 4.
2. Decrease distances 10% for each 9 knots headwind. For operation with tailwinds up to 10 knots, increase distances by 10% for each 2 knots.
3. For operation on a dry, grass runway, increase distances by 40% of the "ground roll" figure.

WEIGHT LBS	SPEED AT 50 FT KIAS	PRESS ALT FT	0°C		10°C		20°C		30°C		40°C	
			GRND ROLL	TOTAL TO CLEAR 50 FT OBS	GRND ROLL	TOTAL TO CLEAR 50 FT OBS	GRND ROLL	TOTAL TO CLEAR 50 FT OBS	GRND ROLL	TOTAL TO CLEAR 50 FT OBS	GRND ROLL	TOTAL TO CLEAR 50 FT OBS
2800	63	S.L.	690	1295	715	1330	745	1370	770	1405	795	1440
		1000	720	1335	745	1370	770	1405	795	1440	825	1480
		2000	745	1370	770	1405	800	1445	825	1480	855	1520
		3000	770	1405	800	1445	830	1485	855	1520	885	1560
		4000	800	1445	830	1485	860	1530	890	1570	920	1610
		5000	830	1485	860	1530	895	1575	925	1615	955	1655
		6000	865	1535	895	1575	925	1615	960	1665	990	1705
		7000	895	1575	930	1625	960	1665	995	1715	1030	1760
		8000	930	1625	965	1670	1000	1720	1035	1765	1070	1815

Figure 5-10. Landing Distance

SECTION 6
WEIGHT & BALANCE/ EQUIPMENT LIST

TABLE OF CONTENTS

	Page
Introduction	6-3
Airplane Weighing Procedures	6-3
Weight and Balance	6-5
Equipment List	6-13

AEROCCIDENTE
Escuela de Aviación

INTRODUCTION

This section describes the procedure for establishing the basic empty weight and moment of the airplane. Sample forms are provided for reference. Procedures for calculating the weight and moment for various operations are also provided. A comprehensive list of all Cessna equipment available for this airplane is included at the back of this section.

It should be noted that specific information regarding the weight, arm, moment and installed equipment list for this airplane can only be found in the appropriate weight and balance records carried in the airplane.

AIRPLANE WEIGHING PROCEDURES

(1) Preparation:
   a. Inflate tires to recommended operating pressures.
   b. Remove the fuel tank sump quick-drain fittings, fuel vent line drain plugs, and fuel selector valve drain plug, and open the reservoir drain valves to drain all fuel.
   c. Remove oil sump drain plug to drain all oil.
   d. Move sliding seats to the most forward position.
   e. Raise flaps to the fully retracted position.
   f. Place all control surfaces in neutral position.

(2) Leveling:
   a. Place scales under each wheel (minimum scale capacity, 500 pounds nose, 1000 pounds each main).
   b. Deflate the nose tire and/or lower or raise the nose strut to properly center the bubble in the level (see Figure 6-1).

(3) Weighing:
   a. With the airplane level and brakes released, record the weight shown on each scale. Deduct the tare, if any, from each reading.

(4) Measuring:
   a. Obtain measurement A by measuring horizontally (along the airplane center line) from a line stretched between the main wheel centers to a plumb bob dropped from the firewall.
   b. Obtain measurement B by measuring horizontally and parallel to the airplane center line, from center of nose wheel axle, left side, to a plumb bob dropped from the line between the main wheel centers. Repeat on right side and average the measurements.

(5) Using weights from (3) and measurements from (4) the airplane weight and C. G. can be determined.

AEROCCIDENTE
Escuela de Aviación

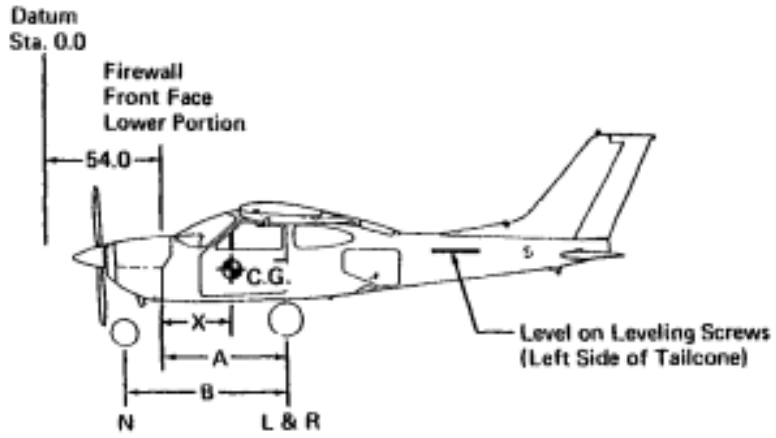

Scale Position	Scale Reading	Tare	Symbol	Net Weight
Left Wheel			L	
Right Wheel			R	
Nose Wheel			N	
Sum of Net Weights (As Weighed)			W	

$X = ARM = (A) - \frac{(N) \times (B)}{W}$; X = ( ) - $\frac{(\quad) \times (\quad)}{(\quad)}$ = ( ) IN.

C.G. ARM = 54.0 + X = IN.

Item	Weight (Lbs.)	X C.G. Arm (In.) =	Moment/1000 (Lbs.-In.)
Airplane Weight (From Item 5, page 6-3)			
Add: Oil (9 Qts at 7.5 Lbs/Gal)	17.0	45.0	.765
Add: Unusable Fuel (1 Gal at 6 Lbs/Gal)	6.0	100.0	.600
Equipment Changes			
Airplane Basic Empty Weight			

Figure 6-1. Sample Airplane Weighing

AEROCCIDENTE
Escuela de Aviación

(6) Basic Empty Weight may be determined by completing Figure 6-1.

WEIGHT AND BALANCE

The following information will enable you to operate your Cessna within the prescribed weight and center of gravity limitations. To figure weight and balance, use the Sample Problem, Loading Graph, and Center of Gravity Moment Envelope as follows:

Take the basic empty weight and moment from appropriate weight and balance records carried in your airplane, and enter them in the column titled YOUR AIRPLANE on the Sample Loading Problem.

NOTE

In addition to the basic empty weight and moment noted on these records, the c.g. arm (fuselage station) is also shown, but need not be used on the Sample Loading Problem. The moment which is shown must be divided by 1000 and this value used as the moment/1000 on the loading problem.

Use the Loading Graph to determine the moment/1000 for each additional item to be carried; then list these on the loading problem.

NOTE

Loading Graph information for the pilot, passengers, baggage and hatshelf is based on seats positioned for average occupants and baggage or hatshelf items loaded in the center of these areas as shown on the Loading Arrangements diagram. For loadings which may differ from these, the Sample Loading Problem lists fuselage stations for these items to indicate their forward and aft c.g. range limitation (seat travel and baggage or hatshelf area limitation). Additional moment calculations, based on the actual weight and c.g. arm (fuselage station) of the item being loaded, must be made if the position of the load is different from that shown on the Loading Graph. Reduced fuel weights may be measured for use with heavy cabin loadings by filling both tanks to the 22 gallon marker for 43 gallons (258 pounds) usable, or filling one tank completely with the other tank at 22 gallons for 51.5 gallons (309 pounds) usable. Both tanks may be filled for maximum range, provided maximum takeoff weight is not exceeded.

AEROCCIDENTE
Escuela de Aviación

SAMPLE WEIGHT AND BALANCE RECORD

(Continuous History of Changes in Structure or Equipment Affecting Weight and Balance)

AIRPLANE MODEL			SERIAL NUMBER						PAGE NUMBER	
DATE	ITEM NO.		DESCRIPTION OF ARTICLE OR MODIFICATION	WEIGHT CHANGE						RUNNING BASIC EMPTY WEIGHT	
				ADDED (+)			REMOVED (-)				
	In	Out		Wt. (lb.)	Arm (In.)	Moment /1000	Wt. (lb.)	Arm (In.)	Moment /1000	Wt. (lb.)	Moment /1000

Figure 6-2. Sample Weight and Balance Record

Total the weights and moments/1000 and plot these values on the Center of Gravity Moment Envelope to determine whether the point falls within the envelope, and if the loading is acceptable.

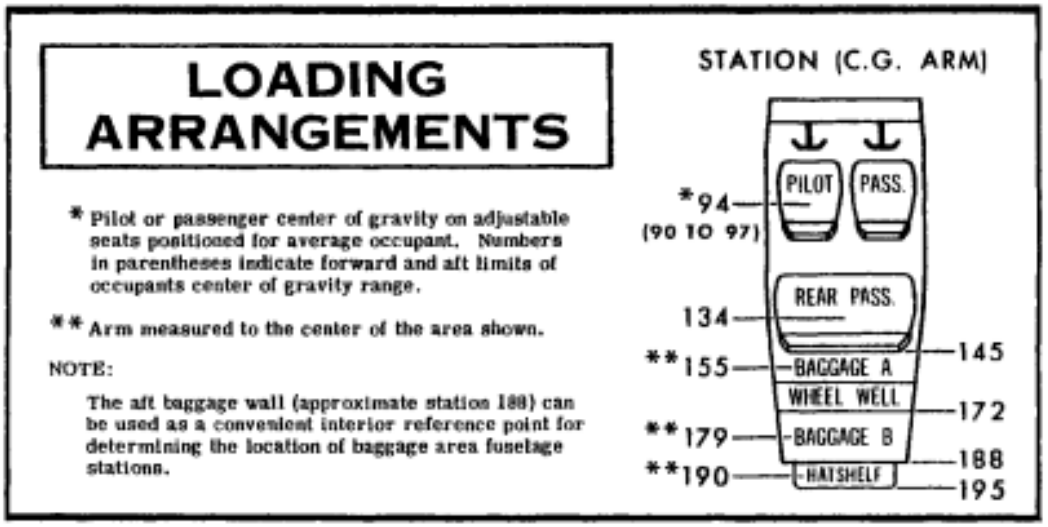

Figure 6-3. Loading Arrangements

AEROCCIDENTE
Escuela de Aviación

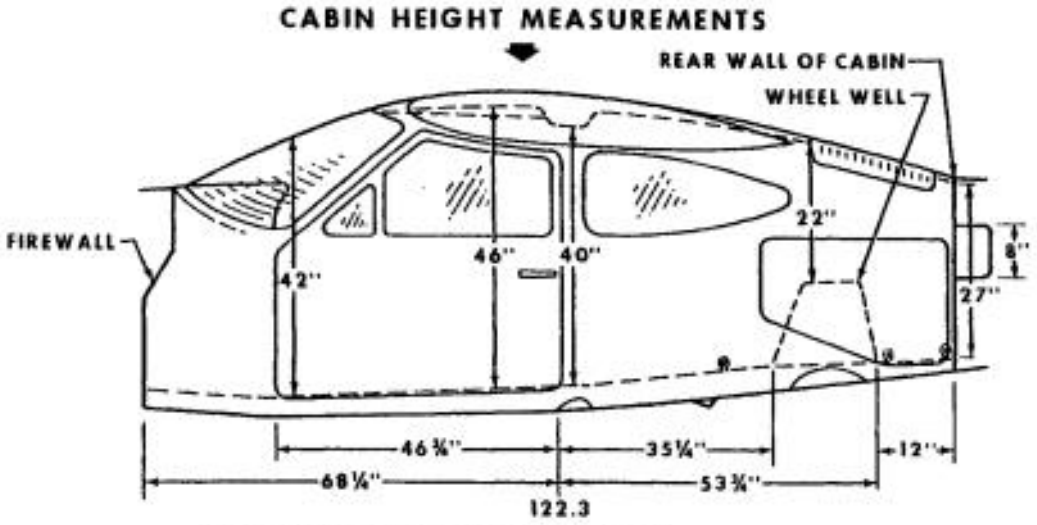

DOOR OPENING DIMENSIONS

	WIDTH (TOP)	WIDTH (BOTTOM)	HEIGHT (FRONT)	HEIGHT (CENTER)	HEIGHT (REAR)
CABIN DOOR	23"	47½"	23"	43"	38"
BAGGAGE DOOR	31"	13"	9½"	20"	20"

WIDTH
• LWR. WINDOW LINE
* CABIN FLOOR

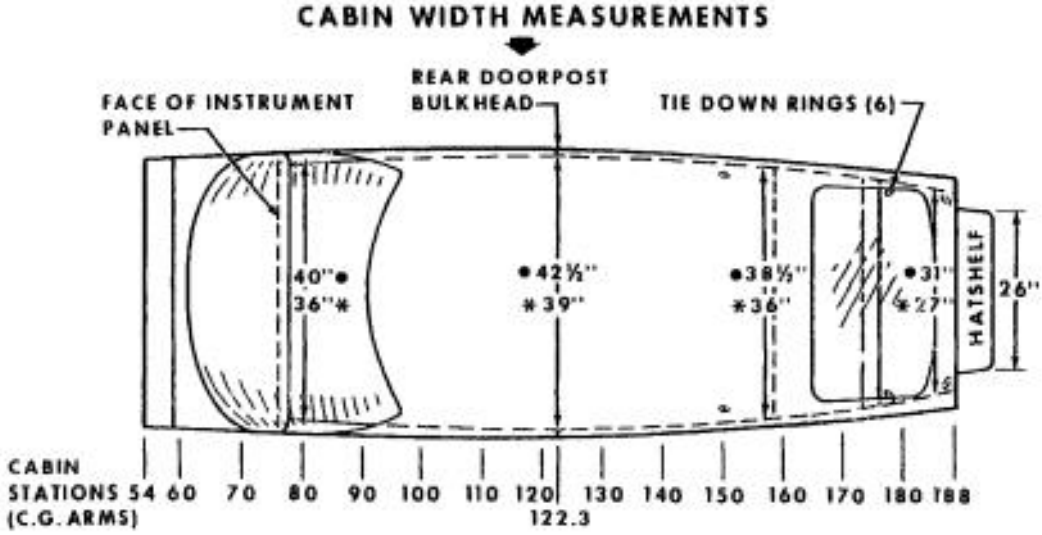

Figure 6-4. Internal Cabin Dimensions

AEROCCIDENTE
Escuela de Aviación

SAMPLE LOADING PROBLEM	SAMPLE AIRPLANE		YOUR AIRPLANE	
	Weight (lbs.)	Moment (lb.-ins. /1000)	Weight (lbs.)	Moment (lb.-ins. /1000)
1. Basic Empty Weight (Use the data pertaining to your airplane as it is presently equipped. Includes unusable fuel and full oil)	1774	184.5		
2. Usable Fuel (At 6 Lbs./Gal.)				
Standard Tanks (60 Gal. Maximum)				
Reduced Fuel (43 Gal.)	258	28.7		
3. Pilot and Front Passenger (Station 90 to 97)	340	32.0		
4. Rear Passengers	340	45.6		
5. Baggage-Area A (on and forward of wheel well) - Sta. 145 to 172				
6. Baggage-Area B (aft of wheel well) and Hatshelf - Sta. 172 to 195	88	15.8		
7. TOTAL WEIGHT AND MOMENT	2800	306.6		
8. Locate this point (2800 at 306.6) on the Center of Gravity Moment Envelope, and since this point falls within the envelope, the loading is acceptable.				

Figure 6-5. Sample Loading Problem

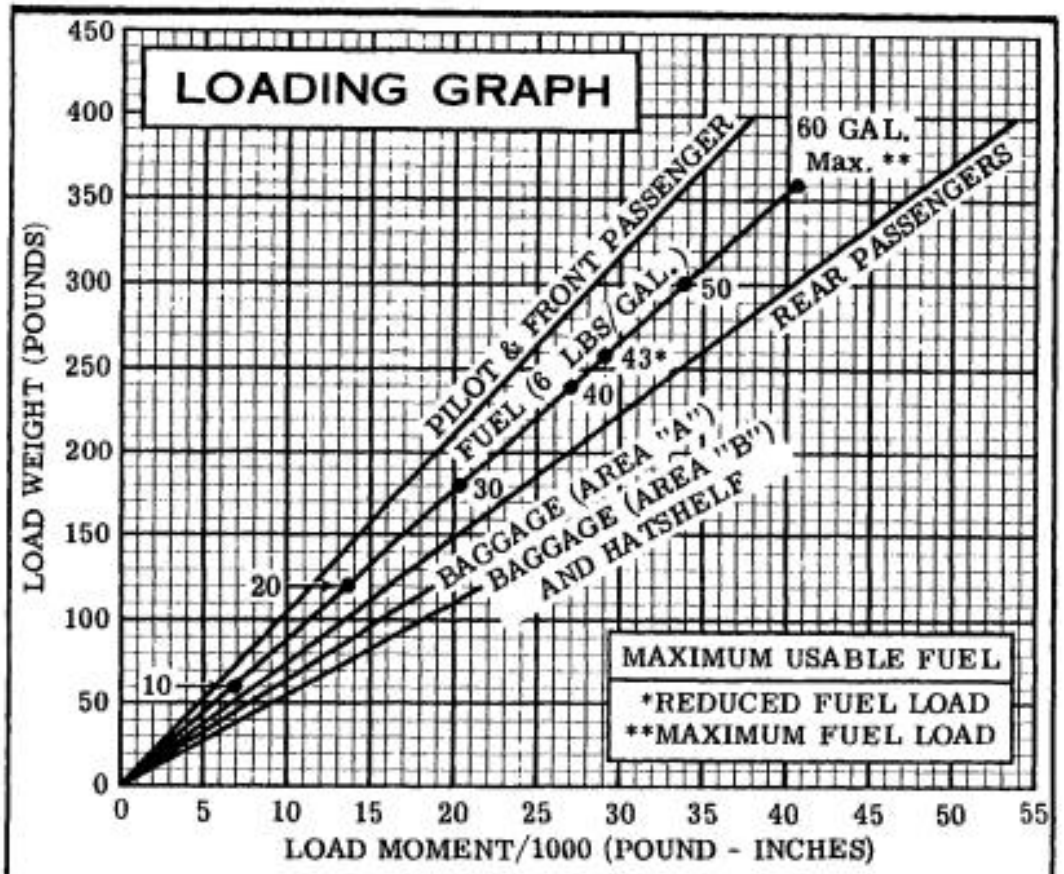

NOTES

(1) Line representing adjustable seats shows the pilot and front passenger center of gravity on adjustable seats positioned for an average occupant. Refer to the Loading Arrangements diagram for forward and aft limits of occupant c.g. range.

(2) BAGGAGE (area "A") is located on and forward of the wheel well. BAGGAGE (area "B") is aft of the wheel well. Maximum baggage load, including the hatshelf, is 120 Lbs. This load may be distributed as desired between baggage areas, provided 12 Lbs. is not exceeded on the hatshelf.

Figure 6-6. Loading Graph

AEROCCIDENTE
Escuela de Aviación

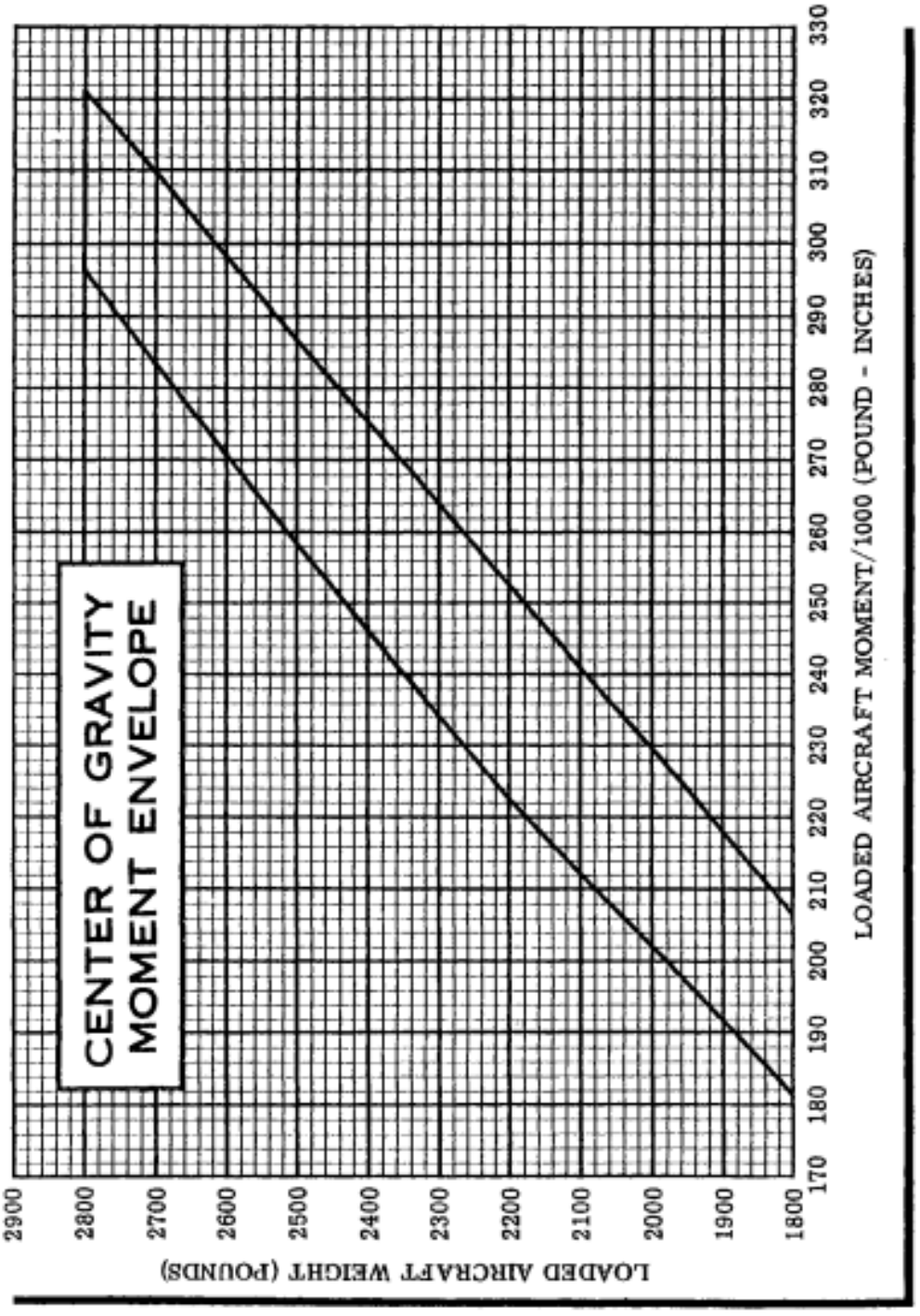

Figure 6-7. Center of Gravity Moment Envelope

AEROCCIDENTE
Escuela de Aviación

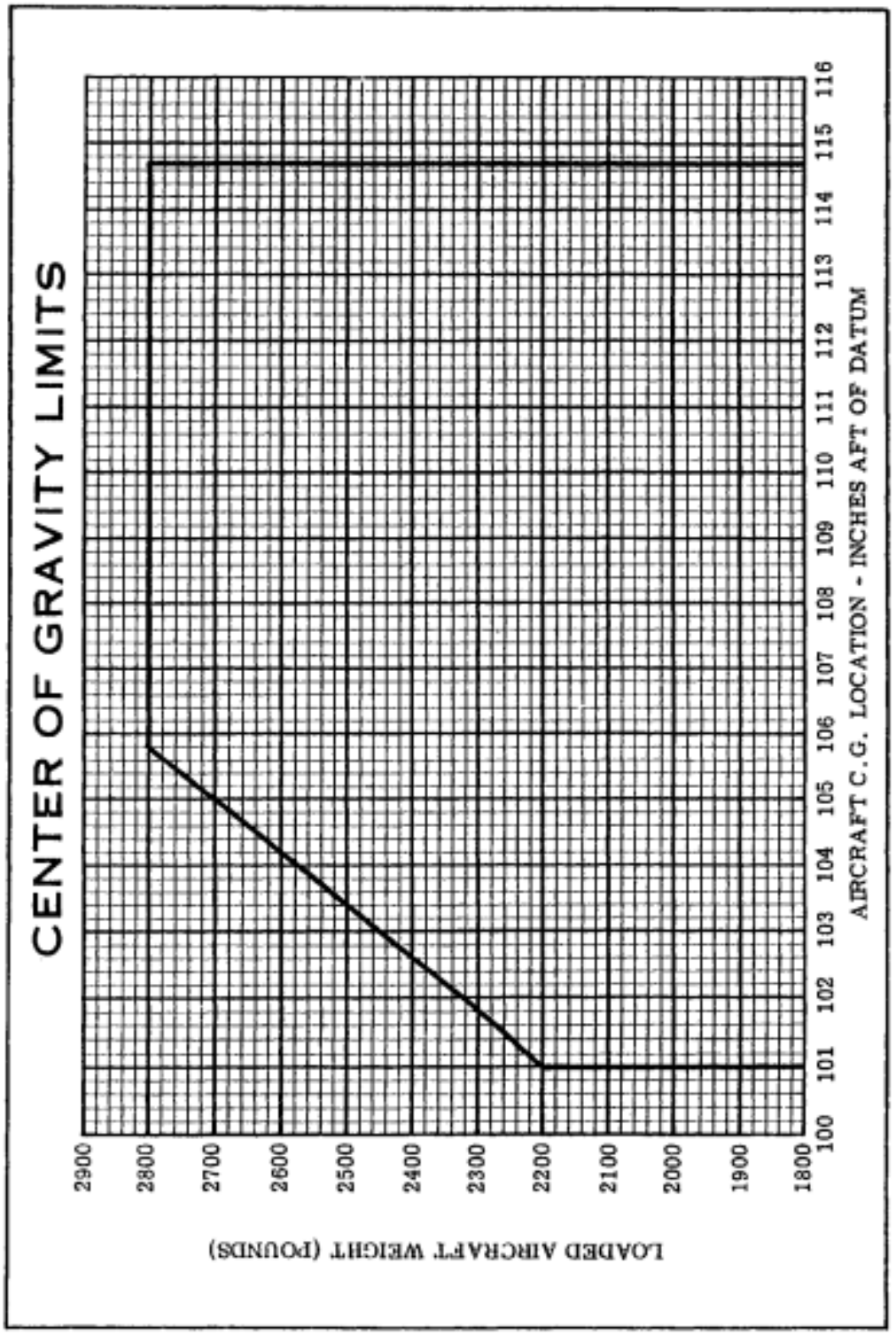

Figure 6-8. Center of Gravity Limits

AEROCCIDENTE
Escuela de Aviación

EQUIPMENT LIST

The following equipment list is a comprehensive list of all Cessna equipment available for this airplane. A separate equipment list of items installed in your specific airplane is provided in your aircraft file. The following list and the specific list for your airplane have a similar order of listing.

This equipment list provides the following information:

An item number gives the identification number for the item. Each number is prefixed with a letter which identifies the descriptive grouping (example: A. Powerplant & Accessories) under which it is listed. Suffix letters identify the equipment as a required item, a standard item or an optional item. Suffix letters are as follows:

-R = required items of equipment for FAA certification
-S = standard equipment items
-O = optional equipment items replacing required or standard items
-A = optional equipment items which are in addition to required or standard items

A reference drawing column provides the drawing number for the item.

NOTE

If additional equipment is to be installed, it must be done in accordance with the reference drawing, accessory kit instructions, or a separate FAA approval.

Columns showing weight (in pounds) and arm (in inches) provide the weight and center of gravity location for the equipment.

NOTE

Unless otherwise indicated, true values (not net change values) for the weight and arm are shown. Positive arms are distances aft of the airplane datum; negative arms are distances forward of the datum.

NOTE

Asterisks (*) after the item weight and arm indicate complete assembly installations. Some major components of the assembly are listed on the lines immediately following. The summation of these major components does not necessarily equal the complete assembly installation.

AEROCCIDENTE
Escuela de Aviación

ITEM NO	EQUIPMENT LIST DESCRIPTION	REF DRAWING	WT LBS	ARM INS
	A. POWERPLANT & ACCESSORIES			
A01-R	ENGINE, LYCOMING IO-360-A1B6D (INCLUDES ALL ELECTRIC STARTER, VACUUM PUMP PAD, GOVERNOR PAD, AND OIL FILTER)	2050001	315.5	38.2
A05-R	FILTER, INDUCTION AIR	C294510-0601	1.5	30.0
A09-R	ALTERNATOR, 14 VOLT, 60 AMP (BELT DRIVE)	C611501-0102	11.5	30.0
A17-P	OIL COOLER, (STEWART-WARNER 8406E)	2050001	2.5	51.0
	OR (HARRISON 8526250)	2050001	2.5	51.0
A33-R	PROPELLER, CONSTANT SPEED (MCCAULEY B2D34C207/78TCA-0)	C161008-0103	51.3	19.7
A37-R	GOVERNOR, PROPELLER (MCCAULEY C290D3/T12)	C161031-0106	3.0	51.5
A41-R	SPINNER INSTALLATION, PROPELLER	1750050	3.5*	17.9*
	SPINNER DOME	0752637	2.0	15.5
	AFT SPINNER BULKHEAD	1750051-1	1.0	24.2
	FWD SPINNER SPACER BULKHEAD	1750051-4	0.5	14.7
A61-A	VACUUM SYSTEM INSTL, ENGINE-DRIVEN	1713217-10	4.6*	54.8*
	DRY VACUUM PUMP	C431003	2.7	50.5
	FILTER ASSY	C294501-0101	0.5	66.2
	VACUUM GAUGE	C668509-0101	0.1	74.0
	VACUUM RELIEF VALVE	C482001-0401	0.5	60.2
	HARDWARE		0.8	56.4
	B. LANDING GEAR & ACCESSORIES			
B01-R-1	WHEEL, BRAKE & TIRE ASSY, 6.00X6 MAIN(TWO) (MCCAULEY)	C163015B0205	33.2*	124.8*
	WHEEL ASSY, MCCAULEY D-30580 (EACH)	C163003-0102	7.0	124.5
	BRAKE ASSY, MCCAULEY C-30018-4 (LEFT)	C163032-0109	1.8	126.9
	BRAKE ASSY, MCCAULEY C-30018-4 (RIGHT)	C163032-0108	1.8	126.9
	TIRE, 6-PLY BLACKWALL (EACH)	C262006-0101	6.6	124.5
	TUBE (EACH)	C262026-0101	1.2	124.5
B01-R-2	WHEEL, BRAKE & TIRE ASSY, 6.00X6 MAIN(TWO) (CLEVELAND)	1241156-137	34.2*	124.8*
	WHEEL ASSY, CLEVELAND 40-113 (EACH)	C163001-0104	7.4	124.5

ITEM NO	EQUIPMENT LIST DESCRIPTION	REF DRAWING	WT LBS	ARM INS
	BRAKE ASSY, CLEVELAND 30-75 (LEFT)	C163030-0113	1.9	126.9
	BRAKE ASSY, CLEVELAND 30-75 (RIGHT)	C163030-0114	1.9	126.9
	TIRE, 6-PLY BLACKWALL (EACH)	C262006-0101	6.6	124.5
	TUBE (EACH)	C262026-0101	1.2	124.5
B04-R-1	WHEEL & TIRE ASSY, 5.00X5 NOSE (MCCAULEY)	C163015B0110	9.5*	33.5*
	WHEEL ASSY, MCCAULEY C-30480	C163003-0401	3.6	33.5
	TIRE, 4-PLY	C262003-0102	4.7	33.5
	TUBE	C262023-0101	1.2	33.5
B04-R-2	WHEEL & TIRE ASSY, 5.00X5 NOSE (CLEVELAND)	1241156-102	8.3*	33.5*
	WHEEL ASSY, CLEVELAND 40-77	1241156-12	2.4	33.5
	TIRE, 4-PLY BLACKWALL	C262003-0102	4.7	33.5
	TUBE	C262023-0101	1.2	33.5
	C. ELECTRICAL SYSTEM			
C01-R	BATTERY, 12 VOLT, 25 AMP HOUR	0511319	23.0	206.9
C01-O	BATTERY, 12 VOLT, 33 AMP HOUR	0712605-1	27.1	206.9
C04-R	REGULATOR, 14 VOLT, 60 AMP ALTERNATOR	C611001-0201	0.6	58.5
C07-A	GROUND SERVICE PLUG RECEPTACLE	2070003-1	3.2	202.8
C19-A	HEATING SYSTEM, PITOT & STALL WARNING (NET CHANGE)	1720099-7	1.1*	113.4*
	HEATED PITOT HEAD	0721105-11	0.6	117.6
C22-A	INSTRUMENT POST LIGHTS & EL PANEL INSTL.	1701030-1	2.3	74.0
C25-A-1	MAP LIGHT, CONTROL WHEEL MOUNTED	1770019-6	0.2	83.0
C25-A-2	MAP LIGHT & MIKE SWITCH, CONTROL WHEEL MOUNTED	1770019-4	0.3	81.9
C31-A	LIGHTS, COURTESY (SET OF THREE)	1770005-3	1.0	109.0
C34-R	PUMP, DUKES ELECTRIC FUEL (C291504-0101)	2016030	2.0	92.0
C37-R	LIGHTS, NAVIGATION (SET OF THREE)	2070027&1723005	1.0	139.5
C40-A	DETECTORS, NAVIGATION LIGHT (SET OF TWO)	0701013-1&-2	NEGL	- -
C43-R	LIGHT INSTALLATION, OMNIFLASH BEACON	2070027	1.4*	274.2*
	FLASHER POWER SUPPLY	C594502-0101	0.7	267.5
	LIGHT ASSY (ON FIN TIP)	C621001-0106	0.4	297.5
	SWITCH, CIRCUIT BREAKER & WIRING		0.2	126.6
C46-A	LIGHTS, STROBE (WING TIP MOUNTED)	2001013-1	3.5*	107.5*
	FLASHER POWER SUPPLY (SET OF TWO)	C622007-0101	2.3	109.3
	STROBE LIGHT, WING TIP (SET OF TWO)	C622006-0101	0.3	106.5
C49-S	LIGHTS, LANDING & TAXI (COWL MOUNTED)	1752085	1.4*	29.8*
	LIGHT BULB - G.E. (EACH)	4509	0.5	24.4

AEROCCIDENTE
Escuela de Aviación

ITEM NO	EQUIPMENT LIST DESCRIPTION	REF DRAWING	WT LBS	ARM INS
	D. INSTRUMENTS			
D01-R	INDICATOR, AIRSPEED	C6610640-0202	0.6	72.9
D01-D	INDICATOR, TRUE AIRSPEED	17133755-2	0.7	73.1
D04-R	ALTERNATE STATIC SOURCE	20001007-0101	0.5	87.2
D07-R-1	ALTIMETER, SENSITIVE (FEET & MILLIBARS)	C6611071-0101	1.0	72.0
D07-D-1	ALTIMETER, SENSITIVE (20 FT. MARKINGS)	C6611071-0102	1.0	72.0
D07-D-2	ALTIMETER, SENSITIVE - SECOND UNIT INSTL.	C6610255-0102	1.0	72.0
D10-A	ALTIMETER, DUAL ALTIMETER SYSTEM)	20001015	0.8	71.9
D16-A-1	ENCODING ALTIMETER LOCATING REGULAR ALTIMETER)	1701031-1	3.0	69.6
D16-A-2	ENCODING ALTIMETER, FEET & MILLIBARS (REQUIRES REMOTE LOCATING REGULAR ALTIMETER)	1701031-2	3.0	69.6
D25-S	CLOCK INSTALLATION	17132221-1	0.4*	96.2*
D28-R	COMPASS INSTALLATION, MAGNETIC	C6645081-0101	0.3	73.6
D37-R	GAGE CLUSTER, LEFT FUEL & OIL PRESSURE	17133551-1	0.5	83.5
D40-R	GAGE CLUSTER, RIGHT FUEL & OIL TEMPERATURE	C6695516-0103	0.5	74.0
D43-P	GAGE CLUSTER, CYLINDER HEAD TEMP & AMMETER	C6695517-0102	0.5	74.0
D49-A	INDICATOR, EGT CONCMY MIXTURE	20001009-1	0.6*	66.8*
	TEMPERATURE SENDER	C6685001-0210	0.1	42.0
D55-R	INDICATOR, GAGE, FUEL FLOW & MANIFOLD PRESSURE	C6685001-0211	0.4	74.0
D64-A-1	GYRO INSTALLATION A61-A VACUUM SYSTEM)	C6620037-0106	0.5	73.0
	(REQUIRES ITEM DIRECTIONAL INDICATOR	1713217-9	6.0*	70.7*
	ATTITUDE INDICATOR	C6610755	2.5	71.9
	HOSES, FITTINGS, SCREWS, CLAMPS	C6610760	2.1	72.1
D64-A-2	GYRO INSTALLATION	17132177&1201126	1.4	66.4
	(REQUIRES A61-A VACUUM SYSTEM)		6.4*	70.8*
	DIRECTIONAL INDICATOR W/HDG SELECTOR	1201126-1	2.9	71.9
	ATTITUDE INDICATOR	C6610760	2.1	72.1
	HOSES, FITTINGS, SCREWS, CLAMPS	17132217	1.4	66.4
D64-A-3	GYRO INSTALLATION FOR NAV-O-MATIC 300A	17132253-1	6.7*	70.9*
	(REQUIRES A61-A VACUUM SYSTEM)			
	DIRECTIONAL INDICATOR	40760-0104	3.2	72.0
	ATTITUDE INDICATOR	C6610760	2.1	72.0

AEROCCIDENTE
Escuela de Aviación

ITEM NO	EQUIPMENT LIST DESCRIPTION	REF DRAWING	WT LBS	ARM INS
	HOSES, FITTINGS, SCREWS, CLAMPS	1713253	1.4	66.4
D67-A	HOURMETER INSTL (C668502-0101)	2001001-3	0.5	64.7
D82-S	GAGE, OUTSIDE AIR TEMP, (C668507-0101)	1713117-1	0.1*	85.9*
D85-R	TACHOMETER INSTALLATION, ENGINE	2006003-0110	0.9*	73.3*
	RECORDING TACHOMETER INDICATOR	C668020-0110	0.7	73.0
	TACH FLEXIBLE SHAFT (ASES 1605-24)	S-1605-2	0.2	61.0
D88-S	INDICATOR, TURN COORDINATOR (C661003-0504)	2006003-1	1.3	72.4
D88-0-1	INDICATOR, TURN COORDINATOR (42320-0014)	3930146-3930145	1.9	71.6
	WITH NAV-O-MATIC 200A (S-1413N2)			
D88-0-2	INDICATOR, TURN & BANK (S-1413N2)	1713220-1	2.0	71.6
D91-S	INDICATOR, RATE OF CLIMB	C661080-0101	0.9	72.6
	E. CABIN ACCOMMODATIONS			
	SEAT, ADJUSTABLE FORE & AFT, PILOT	2014011-12	15.2	102.0
	SEAT, VERTICALLY ADJUSTING, PILOT	2001401-12	12.3	99.0
	SEAT, ADJUSTABLE FORE & AFT, CO-PILOT	2001401-12	12.3	102.0
	SEAT, VERTICALLY ADJUSTING, CO-PILOT	2001401-12	12.3	99.0
E05-R	SEAT, REAR (TWO PIECE BACK CUSHION)	2001401-22	29.0	139.0
E07-S	SEAT, REAR (TWO PIECE BACK CUSHION)	S-2240-115	23.0	139.0
E09-R	BELT ASSY, PILOTS LAP	S-2240-205	1.6	94.0
E15-S	SHOULDER HARNESS ASSY, PILOT	S-2240-16VH	0.6	94.0
E19-S	AUSTRALIAN BELTS & INERTIA REEL (INSTL,	1701027-2	1.0	155.4
	SHOULDER HARNESS (NET CHANGE)	S-2240-16	1.6	94.0
E23-S	BELT & SHOULDER HARNESS ASSY, CO-PILOT	S-2240-16VH	1.6	94.0
E25-S	AUSTRALIAN BELTS & HARNESS ASSY, CO-PILOT	S-1746-16	2.0	135.0
E27-S	BELT ASSY, OCCUPANT LAP (SET OF TWO)	S-2240-11	3.2	135.0
E27-S-1	BELT & SHOULDER HARNESS ASSY,	S-2240-11VH	3.2	135.0
	AUSTRALIAN BELT & HARNESS ASSY,	CESS-1207	0.0	0.0
E27-S-2	REAR OCCUPANT (SET OF TWO)	CESS-1207	20.0	120.0
E33-A-1	CARPET, BLACK (NET CHANGE)	CESS-1207	1.8	124.5
E33-A-2	FEATHER SEATING (NET CHANGE)	1706002-1	0.1	124.5
E33-A	VINYL SEATING (NEW SEAT	1706003-1	1.4	108.0
E43-A	VENT SYSTEM, REAR SEAT	1215073-1	1.4	148.0
E49-A	CUP HOLDERS, RETRACTABLE (SET OF TWO)			
E50-A	HEADRESTS, FRONT (SET OF TWO)			
E51-A	HEADRESTS, REAR (SET OF TWO)			

AEROCCIDENTE
Escuela de Aviación

ITEM NO	EQUIPMENT LIST DESCRIPTION	REF DRAWING	WT LBS	ARM INS
E53-A	MIRROR, REAR VIEW	1713224-1	0.3	72.4
E55-S	SUN VISORS (SET OF TWO)	1701001-1	1.0	93.0
E57-A	WINDOWS, TINTED (SET OF SIX) (NET CHANGE)	1701010-12	0.0	- -
E65-S	BAGGAGE NET	2015009	0.5	180.0
E75-A	STRETCHER INSTALLATION (BOXED)	0700164-11		
	(USE ACTUAL INSTALLED WEIGHT & ARM)			
E85-A	CONTROLS INSTALLATION, DUAL	2060001-2	7.3*	70.8*
	CONTROL WHEEL, RIGHT SIDE	0513260-9	1.8	83.0
	RUDDER PEDALS, RIGHT SIDE (SET OF TWO)	1460320-1	1.1	63.1
E93-P	HEATING SYSTEM, CABIN	2006003	22.0	45.7
	(INCLUDES EXHAUST SYSTEM)	2050001		
	F. PLACARDS & WARNING			
F01-R	PLACARD, OPERATIONAL LIMITATIONS, VFR, DAY & NIGHT	1705037-4	NEGL	- -
F01-U	PLACARD, OPERATIONAL LIMITATIONS, VFR/IFR, DAY & NIGHT	1705037-3	NEGL	- -
F07-R	DUAL WARNING SYS.- GEAR RETRACTION & STALL	1270733	0.3	65.0
	G. AUXILIARY EQUIPMENT			
G01-A	LIFT HANDLES, TAILCONE (SET OF TWO)	1712150-1	1.2	252.7
G07-A	RINGS, AIRPLANE HOISTING	1700122-1	2.4	122.9
G13-A	CORROSION PROOFING, INTERNAL	2001002-1	6.0	140.0
G16-A	STATIC DISCHARGE INSTL. (SET OF TEN)	2001017-1	0.3	226.0
G19-A	STABILIZER ABRASION SHIELD	1701019-1	2.7	276.5
G22-S	TOW BAR (STOWED)	0501019-1	1.6	178.5
G25-S	PAINT, OVERALL EXTERIOR	2004006	11.3*	156.2*
	OVERALL WHITE BASE (96.266 SQ.IN.)		10.5	157.0
	COLOR STRIPE (16.871 SQ.IN.)		0.8	146.1
G28-A	JACKING PADS, WING MAIN SPAR (INSTALLED)	1200028-1	0.1	124.1
G31-A	CABLES, CORROSION RESISTANT (NET CHANGE)	2001002-1	0.0	- -
G55-A	FIRE EXTINGUISHER INSTALLATION	1701008-3	3.0*	125.5*
	FIRE EXTINGUISHER	C421001-0101	2.6	125.5
	FIRE EXTINGUISHER BRACKET	C421001-0102	0.3	125.5
G88-A	WINTERIZATION KIT INSTALLATION, ENGINE	2052048-13	0.6*	35.4*

ITEM NO	EQUIPMENT LIST DESCRIPTION	REF DRAWING	WT LBS	ARM INS
	BREATHER TUBE INSULATION		0.2	53.3
	TWO COWL INLET AIR COVERS (INSTALLED)		0.3	25.0
	H. AVIONICS & AUTOPILOTS			
H01-A-1	CESSNA 300 ADF	3910159-7	7.3*	79.1*
	RECEIVER WITH BFO (R-546E)	41240-0101	2.3	69.5
	INDICATOR (IN-346A)	40980-1001	0.9	71.0
	ADF LOOP ANTENNA & WIRING	3960104-1	2.2	89.1
	ADF SENSE ANTENNA & CABLES	2070000-620	0.2	177.0
	MTG. BOX, WIRING & HDWR.		1.7	71.9
H01-A-2	CESSNA 400 ADF	3910160-2	8.4*	77.8*
	RECEIVER WITH BFO (R-446A)	43090-1001	3.4	69.5
	INDICATOR (IN-346A)	40980-1001	0.9	71.0
	ADF LOOP ANTENNA & WIRING	3960104-1	2.2	89.1
	ADF SENSE ANTENNA & CABLES	2070000-620	0.2	177.0
	MTG. BOX, WIRING & HDWR.		1.7	71.9
H04-A	NARCO DME 190	3910166-4	7.4*	74.7*
	TRANSCEIVER	3930165-1	4.9	68.8
	MOUNTING BOX		0.6	68.4
	DME ANTENNA	3960133-1	0.2	203.9
H07-A	CESSNA 400 GLIDESLOPE	3910157-4	5.0*	163.0*
	RECEIVER, 40 CHANNEL (R-443B)	42100-0000	2.1	211.7
	MOUNTING, RIGID	36450-0000	0.3	211.7
	ANTENNA & COVER ASSEMBLY	1200098-1	0.2	91.0
H10-A	PANTRONICS 300 HF TRANSCEIVER, FIRST UNIT	391056-6	24.5*	141.5*
	TRANSCEIVER (PT10-A)	C582103-0102	3.1	68.5
	MOUNTING BOX		0.8	68.5
	REMOTE POWER SUPPLY (PT-10PS-14)	C582103-0201	8.5	184.3
	ANTENNA LOAD BOX (DX10-RL-14)	C589502-0101	4.2	200.8
	ANTENNA WIRE, 351 IN. LONG	207000-612	0.3	218.2
	CABLE INSTL.	3950124-6	2.5	111.8
	AUDIO CONTROL PANEL INSTL.	3970121-1	1.9	69.3
	HEADPHONE INSTALLATION	3970125-3	0.2	70.5
	MICROPHONE INSTL., HAND-HELD	3970124-3	0.3	75.9
	NOISE FILTER AUDIO (S-1915-1)	3940148-1	0.1	32.3
	RADIO COOLING	3930152-6	1.4	68.2
	RELAY INSTL., SPLIT BUS BAR	3970126-2	0.4	64.9
	MISC. HDWR.		0.8	190.6

AEROCCIDENTE
Escuela de Aviación

ITEM NO	EQUIPMENT LIST DESCRIPTION	REF DRAWING	WT LBS	ARM INS
H11-A-1	PANTRONICS 300 HF TRANSCEIVER, SECOND UNIT	3910156-7	20.2*	157.2*
	TRANSCEIVER (PT10-A)	C582103-0102	3.1	68.5
	MOUNTING BOX		0.8	68.5
	REMOTE POWER SUPPLY (PT-10PS-14)	C582103-0201	8.5	68.3
	ANTENNA LOAD BOX (DX10-RL-14)	C589502-0101	4.3	184.8
	ANTENNA WIRE, 351 IN. LONG	2070000-612	0.5	200.8
	CABLE INSTL.	3950124-6	2.8	218.2
	MISC. HDWR.		1.0	211.8
H11-A-2	PANTRONICS 300 HF TRANSCEIVER, THIRD UNIT	3910156-16	20.2*	157.2*
	TRANSCEIVER (PT10-A)	C582103-0102	3.1	68.5
	MOUNTING BOX		0.8	68.5
	REMOTE POWER SUPPLY (PT-10PS-14)	C582103-0201	8.5	68.3
	ANTENNA LOAD BOX (DX10-RL-14)	C589502-0101	4.3	184.8
	ANTENNA WIRE, 351 IN. LONG	2070000-612	0.5	200.8
	CABLE INSTL.	3950124-6	2.8	218.2
	MISC. HDWR.		1.0	211.8
H11-A-3	SUNAIR SSB HF TRANSCEIVER, SECOND UNIT	3910158-3	22.5*	155.5*
	TRANSCEIVER, SINGLE SIDE BAND (ASB-125)	99680	5.5	68.5
	MOUNTING BOX		0.8	68.5
	REMOTE POWER SUPPLY (PA-1010A)	99682	8.9	68.3
	ANTENNA LOAD BOX (CU-110)	99816	4.3	180.8
	ANTENNA WIRE, 351 IN. LONG	2070000-612	0.5	200.8
	CABLE INSTL.	3950124-5	2.8	218.2
	MISC. HDWR.		1.0	211.8
H11-A-4	SUNAIR SSB HF TRANSCEIVER, THIRD UNIT	3910158-7	22.5*	155.5*
	TRANSCEIVER, SINGLE SIDE BAND (ASB-125)	99680	5.5	68.5
	MOUNTING BOX		0.8	68.5
	REMOTE POWER SUPPLY (PA-1010A)	99682	8.9	68.3
	ANTENNA LOAD BOX (CU-110)	99816	4.3	180.8
	ANTENNA WIRE, 351 IN. LONG	2070000-612	0.5	200.8
	CABLE INSTL.	3950124-5	2.8	218.2
	MISC. HDWR.		1.0	211.8
H13-A	CESSNA 400 MARKER BEACON	3910164-3	2.0*	151.8*
	RECEIVER (R-402A)	42410-5114	0.7	204.6
	ANTENNA, L-SHAPED ROD	0770681-16	0.4	200.8*
H16-A-1	CESSNA 300 TRANSPONDER	3910127-16	3.5*	68.5
	RECEIVER-TRANSMITTER (RT-359A)	41420-1114	2.0	68.3
	ANTENNA (A-109)	41530-0001	0.3*	68.3*
H16-A-2	CESSNA 400 TRANSPONDER	3910128-11	3.6*	70.8*
	RECEIVER-TRANSMITTER (RT-459A)	41470-1114	2.8	68.5
	ANTENNA (A-109)	41530-0001	0.3	83.3

AEROCCIDENTE
Escuela de Aviación

ITEM NO	EQUIPMENT LIST DESCRIPTION	REF DRAWING	WT LBS	ARM INS
H19-A	CESSNA 300 VHF TRANSCEIVER, FIRST UNIT	3910155-5	13.5*	71.7*
	TRANSCEIVER (RT-524A)	31390-1514	6.7	68.0
	MOUNTING BOX (M-514A)	30420-10000	0.5	68.0
	CABLE INSTL.: 300 XCVR	3950124-15	1.0	75.9
	ANTENNA & CABLE, RIGHT VHF COM	3960113-2	1.0	109.3
	AUDIO CONTROL PANEL INSTL.	3970121-1	1.2	169.3
	HEADPHONE INSTALLATION	3970125-3	0.3	70.5
	MICROPHONE INSTL.: HAND-HELD	3970124-3	0.3	75.9
	RADIO COOLING	3930152-6	1.4	68.2
	RELAY INSTL.: SPLIT BUS BAR	3970126-2	0.4	64.9
	MISC. HDWR.		0.7	68.5
H20-A	CESSNA 300 VHF TRANSCEIVER, SECOND UNIT	3910155-6	9.3*	72.9*
	TRANSCEIVER (RT-524A)	31390-1514	6.7	68.0
	MOUNTING BOX (M-514A)	30420-10000	0.5	68.0
	CABLE INSTL.: 300 XCVR	3950124-15	1.0	75.9
	ANTENNA & CABLE, LEFT VHF	3960113-1	1.0	109.3
	MISC. HDWR.		0.7	68.5
H22-A-1	CESSNA 300 NAV/COM, 160 CH, FIRST UNIT	3910151-1	15.2*	86.6*
	WITH VOR/LOC			
	RECEIVER-TRANSMITTER (RT-308C)	42450-1114	6.4	68.0
	VOR/LOC INDICATOR (IN-514B)	45010-1000	0.6	73.5
	NOTE — 1ST NAV/COM INSTALLATION COMPONENTS ARE AS FOLLOWS—			
	ANTENNA & CABLE, RIGHT VHF COM	3960113-2	1.0	109.9
	ANTENNA & CABLE, OMNI INSTL.	3960102-3	1.5	227.1
	AUDIO CONTROL PANEL INSTL.	3970121-1	1.9	229.3
	HEADPHONE INSTALLATION	3970125-3	0.3	70.5
	MICROPHONE INSTL.: HAND-HELD	3970124-3	0.3	75.9
	NOISE FILTER AUDIO (S-1915-1)	3940124-1	0.1	132.3
	RADIO COOLING	3930152-6	1.4	68.2
	RELAY INSTL.: SPLIT BUS BAR	3970126-2	0.4	64.9
	MTG. BOX, WIRING & HDWR.		0.7	66.9
H22-A-2	CESSNA 300 NAV/COM, 720 CH, FIRST UNIT	3910150-1	15.7*	86.0*
	WITH VOR/LOC			
	RECEIVER-TRANSMITTER (RT-328T)	43340-1124	6.9	68.0
	VOR/LOC INDICATOR (IN-514B)	45010-1000	0.6	73.5
	INSTL COMPONENTS SAME AS H22-A-1			
H22-A-3	CESSNA 300 NAV/COM, 720 CH, FIRST UNIT	3910152-1	15.8*	85.9*
	WITH VOR/ILS			
	RECEIVER-TRANSMITTER (RT-328T)	43340-1124	6.9	68.0

AEROCCIDENTE
Escuela de Aviación

ITEM NO	EQUIPMENT LIST DESCRIPTION	REF DRAWING	WT LBS	ARM INS
	VOR/ILS INDICATOR (IN-525B)	45010-2000	0.7	73.5
	INSTL COMPONENTS SAME AS H22-A-1			
H22-A-4	CESSNA 300 NAV/COM, 360 CH, FIRST UNIT	3910150-3	15.8*	85.9*
	WITH VOR/LOC (FOR EXPORT ONLY)			
	RECEIVER-TRANSMITTER (RT-528E-1)	42430-1124	7.0	68.0
	VOR/LOC INDICATOR (IN-514B)	45010-1000	0.6	73.5
	INSTL COMPONENTS SAME AS H22-A-1			
H22-A-5	CESSNA 300 NAV/COM, 360 CH, FIRST UNIT	3910152-3	15.9*	85.8*
	WITH VOR/ILS (FOR EXPORT ONLY)			
	RECEIVER-TRANSMITTER (RT-528E-1)	42430-1124	7.0	68.0
	VOR/ILS INDICATOR (IN-525B)	45010-2000	0.7	73.5
	INSTL COMPONENTS SAME AS H22-A-1			
H25-A-1	CESSNA 300 NAV/COM, 160 CH, SECOND UNIT	3910151-2	9.6*	72.5*
	WITH VOR/LOC			
	RECEIVER-TRANSMITTER (RT-308C)	42450-1114	6.4	68.0
	VOR/LOC INDICATOR (IN-514B)	45010-1000	0.6	73.5
	NOTE--2ND NAV/COM INSTALLATION COMPONENTS			
	ARE AS FOLLOWS--			
	ANTENNA & CABLE, LEFT VHF COM	3960113-1	1.0	109.9
	ANTENNA COUPLER & CABLE (S-2086-1)	3960111-1	0.2	65.0
	MTG. BOX, WIRING & HDWR.		1.4	66.9
H25-A-2	CESSNA 300 NAV/COM, 720 CH, SECOND UNIT	3910150-2	10.1*	72.3*
	WITH VOR/LOC			
	RECEIVER-TRANSMITTER (RT-328T)	43340-1124	6.9	68.0
	VOR/LOC INDICATOR (IN-514B)	45010-1000	0.6	73.5
	INSTL COMPONENTS SAME AS H25-A-1			
H25-A-3	CESSNA 300 NAV/COM, 360 CH, SECOND UNIT	3910150-4	10.2*	72.2*
	WITH VOR/LOC (FOR EXPORT ONLY)			
	RECEIVER-TRANSMITTER (RT-528E-1)	42430-1124	7.0	68.0
	VOR/LOC INDICATOR (IN-514B)	45010-1000	0.6	73.5
	INSTL COMPONENTS SAME AS H25-A-1			
H28-A-1	EMERGENCY LOCATOR TRANSMITTER	0401008-3	2.0*	197.4*
	TRANSMITTER (LEIGH SHARC 7)	C589510-0209	1.8	197.7
	ANTENNA	C589510-0203	0.1	195.5
	CABLE & HDWR.		0.1	194.8
H28-A-2	EMERGENCY LOCATOR TRANSMITTER	0401008-6	1.8*	197.4*
	(FOR USE IN CANADA)			
	TRANSMITTER (LEIGH SHARC 7)	C589510-0212	1.6	197.7
	ANTENNA	C589510-0107	0.1	195.5
	CABLE & HDWR.		0.1	194.8

AEROCCIDENTE
Escuela de Aviación

ITEM NO	EQUIPMENT LIST DESCRIPTION	REF DRAWING	WT LBS	ARM INS
H31-A-1	NAV-O-MATIC 200A AUTOPILOT	3910162	10.2*	107.9*
	COMPUTER & MOUNT (ARC 43610-1000)	3930144-2	1.6	67.5
	TURN COORDINATOR (NET CHANGE)	1200237-9	0.6	69.9
	ROLL ACTUATOR INSTL.	1670122-7	6.1	125.5
	RELAY INSTALLATION		0.1	167.0
	CABLES AND HARDWARE		1.2*	85.6*
H31-A-2	NAV-O-MATIC 300A AUTOPILOT	3910163	22.2*	85.6*
	CONTROLLER & MOUNT (ARC 42660-1000)	3930145-2	1.8	67.5
	GYRO INSTALLATION (ITEM 064-A-3)	1713253-1	6.6	70.9
	VACUUM SYSTEM (ITEM A61-A)	1713217-10	4.6	54.8
	TURN COORDINATOR (NET CHANGE)	3930145-2	0.6	69.9
	ROLL ACTUATOR INSTL.	1200237-4	7.2	125.1
	RELAY INSTALLATION	1670122-7	0.1	167.0
	CABLES AND HARDWARE		1.2	85.9
H46-A	AVIONICS OPTION F - ADF ANTI-PRECIP. ADF)	3910165	0.5	130.2
	ANTENNAE (FOR USE WITH 300 OR 400 ADF)			
	(REPLACES SENSE ANTENNA - NET CHANGE)			
H55-A	MICROPHONE-HEADSET COMBINATION	3970112-1	0.5	72.4
	(INCLUDES MIKE SWITCH)			
H61-R	CABIN SPEAKER INSTL. (C596510-0101)	2070027	1.9	111.0
	J. SPECIAL OPTION PACKAGES			
J01-A	CARDINAL RG II EQUIPMENT	2000001-10	62.0*	92.8*
	CONSISTS OF THE FOLLOWING ITEMS			
	A61-A VACUUM SYSTEM INSTL.	1713217-10	4.6	54.8
	C07-A GROUND SERVICE RECEPTACLE	2070003-1	3.2	202.8
	C19-A HEAT SYS. PITOT & STALL WARNING	1720099-7	1.1	113.4
	C31-A COURTESY LIGHTS	1770005-3	1.0	109.0
	C40-A DETECTORS, NAV LIGHTS	0701013-16-2	NEGL	-
	D01-O AIRSPEED IND. (NET CHANGE)	1713375-2	0.0	74.3
	D64-A-1 GYRO INSTALLATION	1713247-9	6.3	70.8
	E85-A DUAL CONTROLS	2060401-2	7.3	70.8
	H01-A-1 CESSNA 300 ADF WITH BFO	3910011-7	7.3	79.1
	H16-A-1 CESSNA 300 TRANSPONDER	3910127-16	3.5	69.9
	H22-A-1 CESSNA 300 NAV/COM	3910150-3	15.7	86.0
	H28-A-1 EMERGENCY LOCATOR TRANSMITTER	0401008-3	1.2	197.4
	H31-A-1 CESSNA 200A NAV-O-MATIC	3910162	10.2	107.9
J04-A	CARDINAL RG II NAV PAC (NET CHANGE)	3910161-4	17.9*	109.6*

AEROCCIDENTE
Escuela de Aviación

ITEM NO	EQUIPMENT LIST DESCRIPTION	REF DRAWING	WT LBS	ARM INS
	CONSISTS OF THE FOLLOWING ITEMS			
H07-A	CESSNA 400 GLIDESLOPE	3910157-4	5.0	163.0
H13-A	CESSNA 400 MARKER BEACON	3910164-3	2.7	151.8
H22-A-2	CESSNA 300 NAV/COM, FIRST UNIT, 720 CH WITH VOR/LOC (DELETE)	3910150-1	-15.7	86.0
H22-A-3	CESSNA 300 NAV/COM, FIRST UNIT, 720 CH WITH VOR/ILS (ADD)	3910152-1	15.8	85.9
H25-A-2	CESSNA 300 NAV/COM, SECOND UNIT	3910150-2	10.1	72.3

AEROCCIDENTE
Escuela de Aviación

SECTION 7
AIRPLANE & SYSTEMS DESCRIPTIONS

TABLE OF CONTENTS

	Page
Introduction	7-3
Airframe	7-3
Flight Controls	7-8
Trim Systems	7-8
Instrument Panel	7-8
Ground Control	7-9
Wing Flap System	7-9
Landing Gear System	7-10
Landing Gear Lever	7-11
Landing Gear Position Indicator Lights	7-11
Landing Gear Operation	7-11
Emergency Hand Pump	7-11
Landing Gear Warning System	7-12
Baggage Compartment	7-12
Seats	7-12
Seat Belts and Shoulder Harnesses	7-13
Seat Belts	7-13
Shoulder Harnesses	7-15
Integrated Seat Belt/Shoulder Harnesses With Inertia Reels	7-15
Entrance Doors and Cabin Windows	7-16
Control Locks	7-17
Engine	7-17
Engine Controls	7-17
Engine Instruments	7-18
New Engine Break-in and Operation	7-19
Engine Oil System	7-19
Ignition-Starter System	7-20
Air Induction System	7-20
Exhaust System	7-21
Fuel Injection System	7-21
Cooling System	7-21
Propeller	7-22

AEROCCIDENTE
Escuela de Aviación

TABLE OF CONTENTS (Continued)

Page

Fuel System 7-22
Hydraulic System 7-27
Brake System 7-27
Electrical System 7-29
Master Switch 7-29
Ammeter 7-30
Over-Voltage Sensor and Warning Light 7-30
Circuit Breakers and Fuses 7-30
Ground Service Plug Receptacle 7-31
Lighting Systems 7-32
Exterior Lighting 7-32
Interior Lighting 7-32
Cabin Heating, Ventilating and Defrosting System 7-35
Pitot-Static System and Instruments 7-35
Airspeed Indicator 7-36
Rate-of-Climb Indicator 7-36
Altimeter 7-37
Vacuum System and Instruments 7-37
Attitude Indicator 7-37
Directional Indicator 7-37
Suction Gage 7-37
Stall Warning System 7-39
Avionics Support Equipment 7-39
Audio Control Panel 7-39
Transmitter Selector Switch 7-39
Automatic Audio Selector Switch 7-41
Audio Selector Switches 7-41
Microphone-Headset 7-42
Static Dischargers 7-42

AEROCCIDENTE
Escuela de Aviación

INTRODUCTION

This section provides description and operation of the airplane and its systems. Some equipment described herein is optional and may not be installed in the airplane. Refer to Section 9, Supplements, for details of other optional systems and equipment.

AIRFRAME

The Cardinal RG is an all-metal, four-place, high-wing, single-engine airplane equipped with retractable tricycle landing gear, and designed for general utility purposes.

The construction of the fuselage is a conventional formed sheet metal bulkhead and skin design referred to as semi-monocoque. Incorporated into the fuselage structure are a stainless steel tunnel aft of the firewall required for the aft retracting nose wheel, a flat floorboard extending from the firewall to the main wheel wells, large cabin door openings, and a baggage door opening. Major items of structure include a forward carry-through spar and a forged aluminum main carry-through spar to which the wings are attached. The lower aft portion of the fuselage center section contains the forgings and structure for the retractable main landing gear. A reinforced tailskid/tie-down ring is installed on the tailcone for tailcone protection.

The full cantilever, modified laminar flow wings with integral fuel tanks are constructed of a forward spar, main spar, conventional formed sheet metal ribs and aluminum skin. The integral fuel tanks are formed by the forward spar, two sealing ribs, and an aft fuel tank spar forward of the main spar. The modified Frise type ailerons and single-slotted flaps are of the conventional formed sheet metal ribs and smooth aluminum skin construction. The ailerons are equipped with ground adjustable trim tabs on the inboard end of the trailing edge, and balance weights in the leading edges.

The empennage (tail assembly) consists of a conventional vertical stabilizer and rudder, and a stabilator. The vertical stabilizer and rudder are of conventional construction consisting of formed sheet metal forward and aft spars, and formed sheet metal ribs covered with aluminum skin. The tip of the rudder is designed with a leading edge overhang which contains a balance weight. The stabilator is a combination of the horizontal stabilizer and elevator, and incorporates a 40% span anti-servo trim tab. The stabilator is constructed of a torque transmitting primary spar, an aft spar, formed sheet metal ribs, and aluminum skin.

AEROCCIDENTE
Escuela de Aviación

AILERON CONTROL SYSTEM

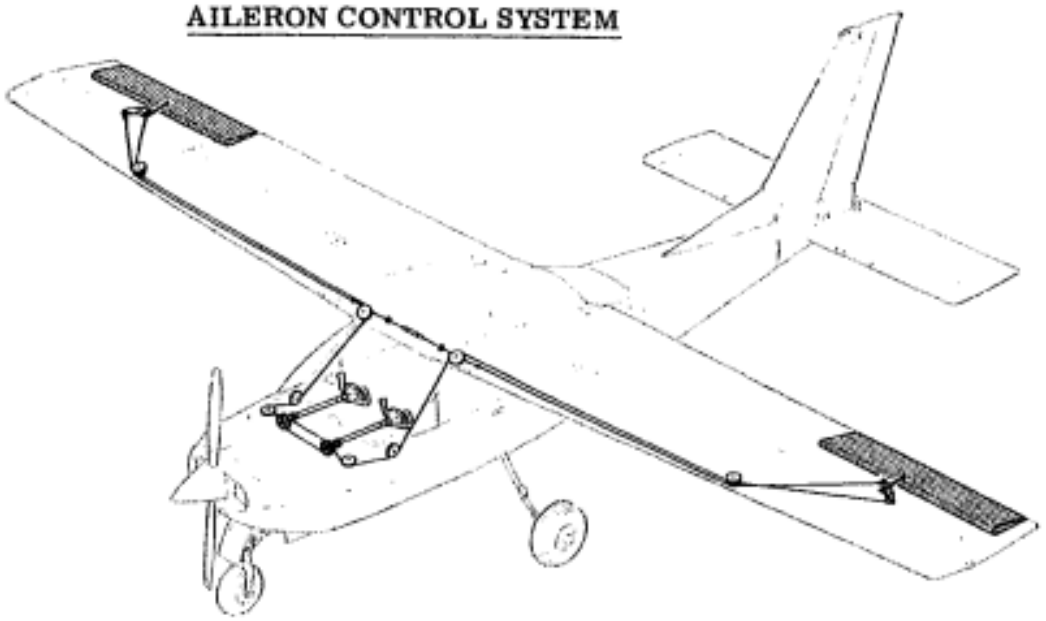

RUDDER AND RUDDER TRIM
CONTROL SYSTEMS

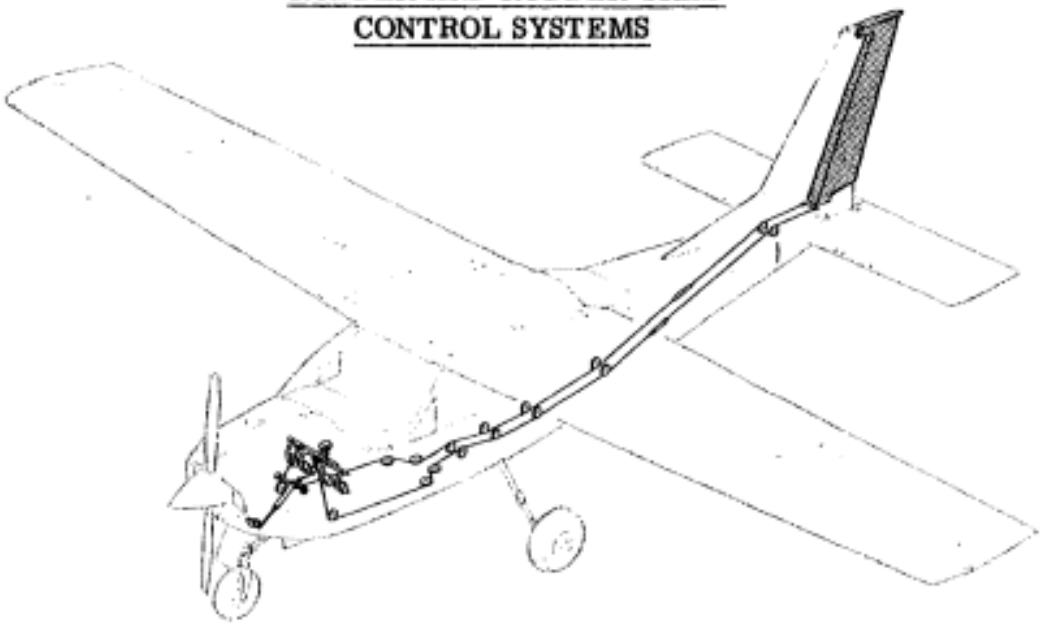

Figure 7-1. Flight Control and Trim Systems (Sheet 1 of 2)

AEROCCIDENTE
Escuela de Aviación

STABILATOR CONTROL SYSTEM

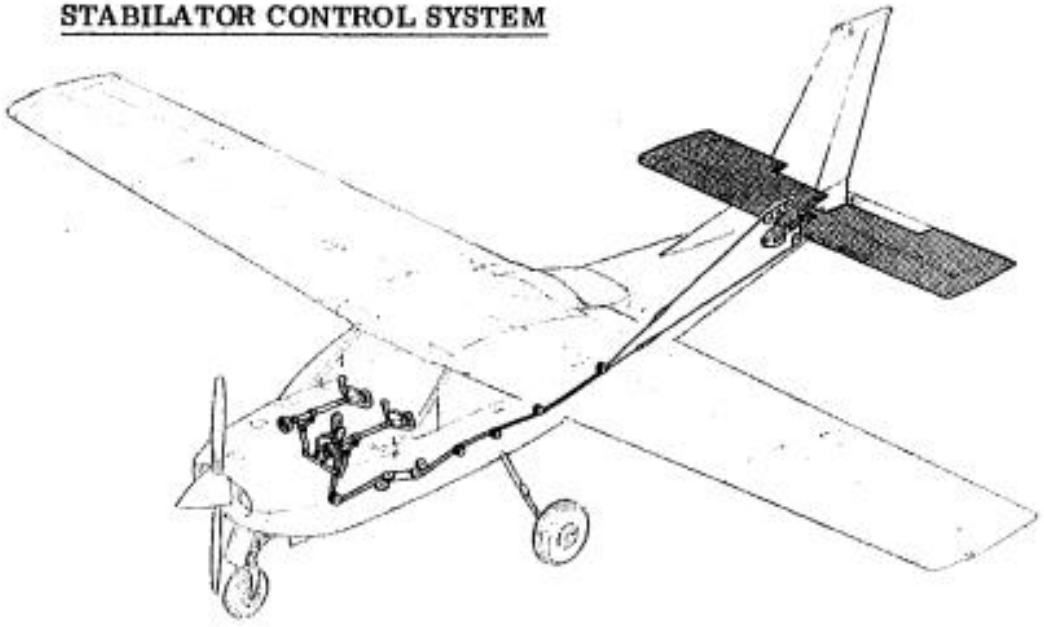

STABILATOR TRIM CONTROL SYSTEM

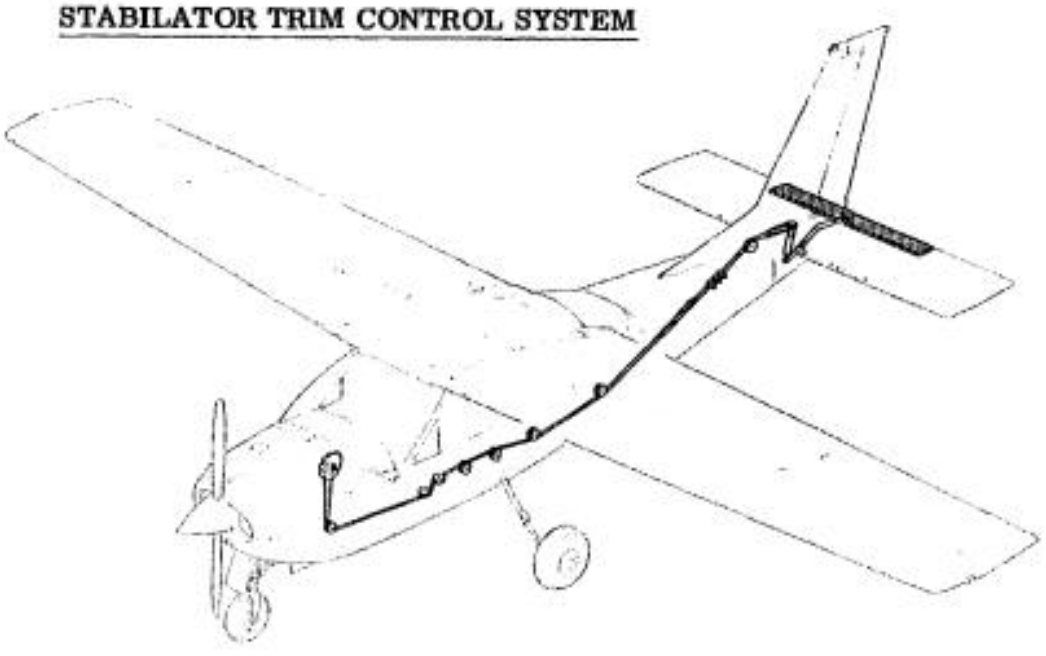

Figure 7-1. Flight Control and Trim Systems (Sheet 2 of 2)

AEROCCIDENTE
Escuela de Aviación

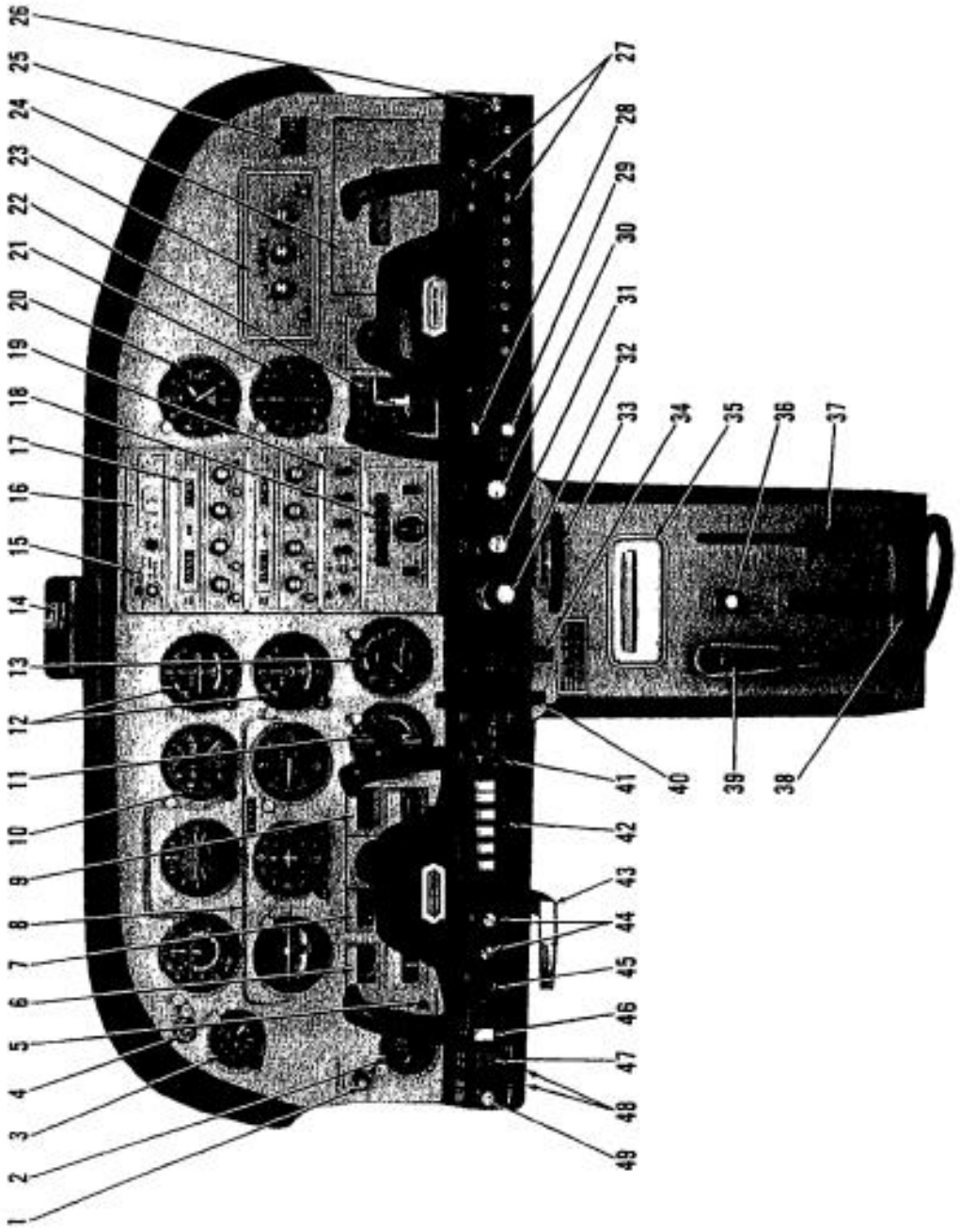

Figure 7-2. Instrument Panel (Sheet 1 of 2)

AEROCCIDENTE
Escuela de Aviación

1. Static Pressure Alternate Source Valve
2. Economy Mixture Indicator
3. Clock
4. Suction Gage
5. Over-Voltage Warning Light
6. Cylinder Head Temperature Gage and Ammeter
7. Left Fuel Quantity Indicator and Oil Pressure Gage
8. Flight Instrument Group
9. Right Fuel Quantity Indicator and Oil Temperature Gage
10. Encoding Altimeter
11. Manifold Pressure/Fuel Flow Indicator
12. Omni Course Indicators
13. Tachometer
14. Rear View Mirror
15. Marker Beacon Indicator Lights and Switches
16. Audio Control Panel
17. Radios
18. Autopilot Control Unit
19. Transponder
20. Secondary Altimeter
21. ADF Bearing Indicator
22. Wing Flap Switch and Position Indicator
23. ADF Radio
24. Map Compartment
25. Flight Hour Recorder
26. Right Cabin Air Control Knob
27. Circuit Breakers
28. Defroster Control Knob
29. Cabin Heat Control Knob
30. Mixture Control Knob
31. Propeller Control Knob
32. Throttle (With Friction Lock)
33. Rudder Trim Control Wheel
34. Landing Gear Lever
35. Ashtray
36. Cigar Lighter
37. Cowl Flap Control Lever
38. Courtesy Light
39. Microphone
40. Stabilator Trim Control Wheel
41. Landing Gear Position Indicator Lights
42. Electrical Switches
43. Parking Brake Handle
44. Instrument and Radio Dial Light Rheostat Control Knobs
45. Ignition Switch
46. Auxiliary Fuel Pump Switch
47. Master Switch
48. Phone and Auxiliary Mike Jacks
49. Left Cabin Air Control Knob

Figure 7-2. Instrument Panel (Sheet 2 of 2)

AEROCCIDENTE
Escuela de Aviación

The stabilator contains a beam mounted balance weight attached to the center of the primary spar and extending into the fuselage tailcone. The leading edge contains four inverted slots formed of sheet metal and positioned to place two on each side of the fuselage.

FLIGHT CONTROLS

The airplane's flight control system consists of conventional aileron and rudder control surfaces and a stabilator (combined horizontal stabilizer and elevator) (see figure 7-1). The control surfaces are manually operated through mechanical linkage using a control wheel for the ailerons and stabilator, and rudder/brake pedals for the rudder.

TRIM SYSTEMS

Manually-operated rudder and stabilator trim is provided. Rudder trimming is accomplished through the rudder control system (see figure 7-1) by rotating the horizontally mounted trim control wheel either left or right, which will offset the rudder. Stabilator trimming is accomplished through the stabilator trim tab by utilizing the vertically mounted trim control wheel. Upward rotation of the trim wheel will trim nose-down; conversely, downward rotation will trim nose-up.

INSTRUMENT PANEL

The instrument panel (see figure 7-2) is designed around the basic "T" configuration. The gyros are located immediately in front of the pilot, and arranged vertically over the control column. The airspeed indicator and altimeter are located to the left and right of the gyros respectively. The remainder of the flight instruments are located around the basic "T". The engine instrument cluster and fuel quantity indicators are arranged around the base of the control wheel shaft. An alternate static source valve control knob may be installed on the left edge of the instrument panel. Avionics equipment is stacked approximately on the centerline of the panel, with the right side of the panel containing the wing flap switch and indicator, map compartment, and space for additional instruments and avionics equipment. A switch and control panel, at the lower edge of the instrument panel, contains most of the switches, controls, and circuit breakers necessary to operate the airplane. The left side of the panel contains the left cabin air control knob, master switch auxiliary fuel pump switch, ignition switch, panel light intensity controls, electrical switches for installed equipment and landing gear indicator lights. The center area contains the stabilator trim control wheel, landing gear lever, throttle, propeller control, and mixture control. The right side of

AEROCCIDENTE
Escuela de Aviación

the panel contains the defroster control knob, cabin heat control knob, circuit breakers and right cabin air control knob. A pedestal, extending from the edge of the switch and control panel to the floorboard, contains the rudder trim control wheel, an ashtray, a cigar lighter, the cowl flap control lever, and the microphone bracket. A parking brake handle is mounted under the switch and control panel, in front of the pilot.

For details concerning the instruments, switches, circuit breakers, and controls on this panel, refer in this section to the description of the systems to which these items are related.

GROUND CONTROL

Effective ground control while taxiing is accomplished through nose wheel steering by using the rudder pedals; left rudder pedal to steer left and right rudder pedal to steer right. When a rudder pedal is depressed, a spring-loaded steering bungee (which is connected to the nose gear and to the rudder bars) will turn the nose wheel through an arc of approximately 15° each side of center. By applying either left or right brake, the degree of turn may be increased up to 39° each side of center.

Moving the airplane by hand is most easily accomplished by attaching a tow bar to the nose gear strut. If a tow bar is not available, or pushing is required, use the main landing gear struts as push points. Do not use the vertical or horizontal surfaces to move the airplane. If the airplane is to be towed by vehicle, never turn the nose wheel more than 39° either side of center or structural damage to the nose gear could result.

The minimum turning radius of the airplane, using differential braking and nose wheel steering during taxi, is approximately 30 feet 9 inches. To obtain a minimum radius turn during ground handling, the airplane may be rotated around either main landing gear by pressing down at a tailcone bulkhead just forward of the stabilator to raise the nose wheel off the ground.

WING FLAP SYSTEM

The wing flaps are of the large span, single-slot type (see figure 7-3), and are extended or retracted by positioning the wing flap switch lever on the instrument panel to the desired flap deflection position. The switch lever is moved up or down in a slotted panel that provides mechanical stops at the 10° and 20° positions. For flap settings greater than 10°, move the switch lever to the right to clear the stop and position it as desired. A scale and pointer on the left side of the switch lever indicates flap travel in degrees. The wing flap system circuit is protected by a

AEROCCIDENTE
Escuela de Aviación

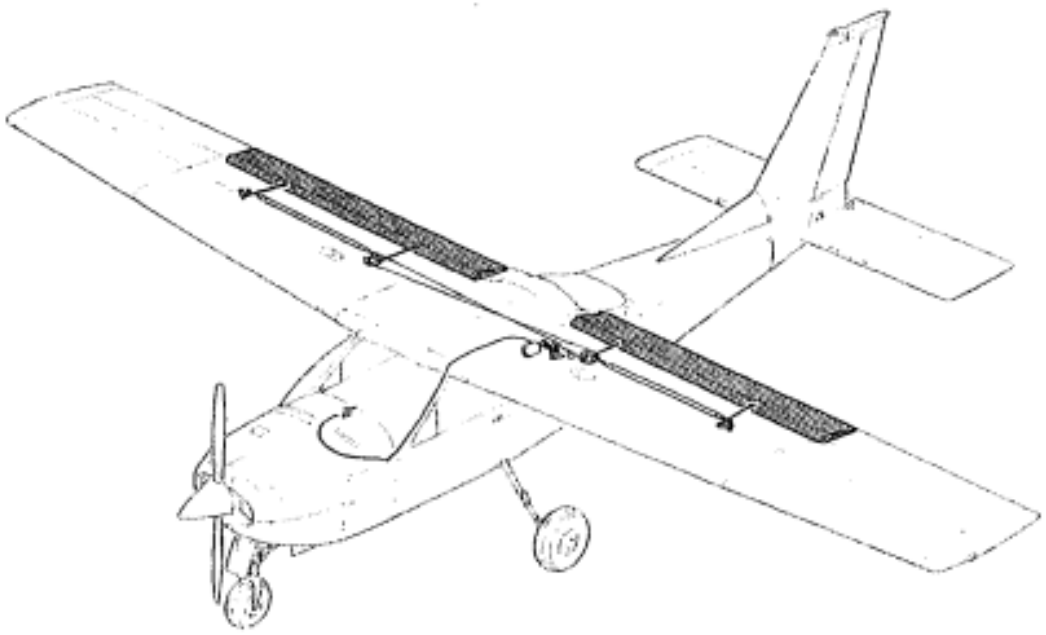

Figure 7-3. Wing Flap System

15-ampere circuit breaker, labeled FLAP, on the right side of the instrument panel.

LANDING GEAR SYSTEM

The landing gear is a retractable, tricycle type with a steerable nose wheel and two main wheels. Shock absorption is provided by the tubular spring-steel main landing gear struts and the air/oil nose gear shock strut. Each main wheel is equipped with a hydraulically actuated disc-type brake on the inboard side of the wheel.

The landing gear is extended and retracted, and the main gear down locks are operated, by hydraulic actuators powered by an electrically-driven hydraulic power pack (see figure 7-7). The power pack assembly is located aft of the rear baggage compartment wall. Landing gear system hydraulic pressure is maintained automatically by the power pack and serves as the main gear up lock. If pressure drops below that necessary to retain up lock pressure on the main gear, the power pack will automatically compensate, providing a positive up lock. The nose gear incorporates an over-center mechanical linkage which provides a positive mechanical up and down lock. Mechanically-actuated wheel well doors are provided for the nose gear. They are open when the nose gear is down and closed when it is retracted.

AEROCCIDENTE
Escuela de Aviación

Power pack operation is started and stopped by a pressure switch, and hydraulic pressure is directed by the landing gear lever. Two position indicator lights are provided to show landing gear position. The landing gear system is also equipped with a nose gear safety switch, an emergency extension hand pump, and a gear-up warning system.

LANDING GEAR LEVER

The landing gear lever, mounted to the left of the engine controls, has two positions (up for gear up, and down for gear down) which give a mechanical indication of the gear position selected. From either position, the gear lever must be pulled out to clear a detent before it can be repositioned; operation of the landing gear system will not begin until the lever has been repositioned. After the lever has been repositioned, it directs hydraulic pressure within the system to actuate the gear to the selected position.

LANDING GEAR POSITION INDICATOR LIGHTS

Two position indicator lights, adjacent to the stabilator trim control wheel, indicate that the gear is either up or down and locked. Both the gear-up (amber) and gear-down (green) lights are the press-to-test type, incorporating dimming shutters for night operation. If an indicator light bulb should burn out, it can be replaced in flight with the bulb from the remaining indicator light.

LANDING GEAR OPERATION

To retract or extend the landing gear, pull out on the gear lever and move it to the desired position. After the lever is positioned, the power pack will create pressure in the system and actuate the landing gear to the selected position. During a normal cycle, the gear locks up or down and the position indicator light comes on (amber for up and green for down) indicating completion of the cycle. After indicator light illumination, hydraulic pressure will continue to build until the power pack pressure switch turns the power pack off.

A safety switch, actuated by the nose gear, electrically prevents inadvertent retraction whenever the nose gear strut is compressed by the weight of the airplane. Also, a switch type circuit breaker is provided as a maintenance safety feature. With the switch pulled out, landing gear operation is prevented. After maintenance is completed, and prior to flight, the switch should be pushed back in.

EMERGENCY HAND PUMP

A hand-operated hydraulic pump, located under a cover between the

AEROCCIDENTE
Escuela de Aviación

front seats, is provided for manual extension of the landing gear in the event of a hydraulic system failure. The landing gear cannot be retracted with the hand pump. To utilize the pump, raise the cover, extend the handle forward, and pump vertically. For complete emergency procedure refer to Section 3.

LANDING GEAR WARNING SYSTEM

The airplane is equipped with a landing gear warning system designed to help prevent the pilot from inadvertently making a wheels-up landing. The system consists of a throttle actuated switch which is electrically connected to a dual warning unit. The warning unit is connected to the airplane speaker.

When the throttle is retarded below approximately 12 inches of manifold pressure (master switch on), the throttle linkage will actuate a switch which is electrically connected to the gear warning portion of a dual warning unit. If the landing gear is retracted (or not down and locked), an intermittent tone will be heard on the airplane speaker.

BAGGAGE COMPARTMENT

The baggage compartment consists of the area from the back of the rear passenger seats to the aft cabin bulkhead. Mounted to the aft cabin bulkhead, and extending aft of it, is a hatshelf. Access to the baggage compartment and the hatshelf is gained through a lockable baggage door on the left side of the airplane, or from within the airplane cabin. A baggage net with six tie-down straps is provided for securing baggage and is attached by tying the straps to tie-down rings provided in the airplane. When loading the airplane, children should not be placed or permitted in the baggage compartment, and any material that might be hazardous to the airplane or occupants should not be placed anywhere in the airplane. For baggage area and door dimensions, refer to Section 6.

SEATS

The seating arrangement consists of two separate adjustable seats for the pilot and front passenger, and a solid or split-backed fixed seat in the rear. The pilot's and front passenger's seats are available in two different designs: four-way and six-way adjustable.

Four-way seats may be moved forward or aft, and the seat back angle changed. To position the seat, lift the lever under the left corner of the seat, slide the seat into position, release the lever, and check that the seat

AEROCCIDENTE
Escuela de Aviación

is locked in place. The seat back is spring-loaded to the vertical position. To adjust its position, rotate the knob on the right rear side of the seat and reposition the back. The seat backs will also fold full forward.

The six-way seats may be moved forward or aft, adjusted for height, and the seat back angle is infinitely adjustable. Position the seat by lifting the tubular handle, under the center of the seat bottom, and slide the seat into position; then release the lever and check that the seat is locked in place. Raise or lower either seat by rotating a crank under the left corner of the seat. Seat back angle is adjustable by rotating a crank under the right corner of either seat. The seat bottom angle will change as the seat back angle changes, providing proper support. The seat backs will also fold full forward.

The rear passenger's seats consist of a fixed one-piece seat bottom with either one-piece or individually adjustable seat backs. The one-piece back is adjusted by a lever under the center of the seat bottom between the passengers. Two adjustment levers are provided for the individually adjustable backs. These levers are under the left and right corners of the seat bottom. All seat back configurations are spring-loaded to the vertical position. To adjust either type of seat back, lift the adjustment lever and reposition the back.

Headrests are available for any of the seat configurations. To adjust the headrest, apply enough pressure to it to raise or lower it to the desired level. The headrest may be removed at any time by raising it until it disengages from the top of the seat back.

SEAT BELTS AND SHOULDER HARNESSES

All seat positions are equipped with seat belts (see figure 7-4). The pilot's and front passenger's seats are also equipped with separate shoulder harnesses; separate shoulder harnesses are available for the remaining seat positions. Integrated seat belt/shoulder harnesses with inertia reels can be furnished for the pilot's and front passenger's seat positions if desired.

SEAT BELTS

The seat belts used with the pilot's and front passenger's seats are attached to fittings on the floorboard. The buckle half is inboard of each seat and the link half is outboard of each seat. The belts for the rear seat are attached to the seat frame, with the link halves on the left and right sides of the seat bottom, and the buckles at the center of the seat bottom.

To use the seat belts for the front seats, position the seat as desired,

AEROCCIDENTE
Escuela de Aviación

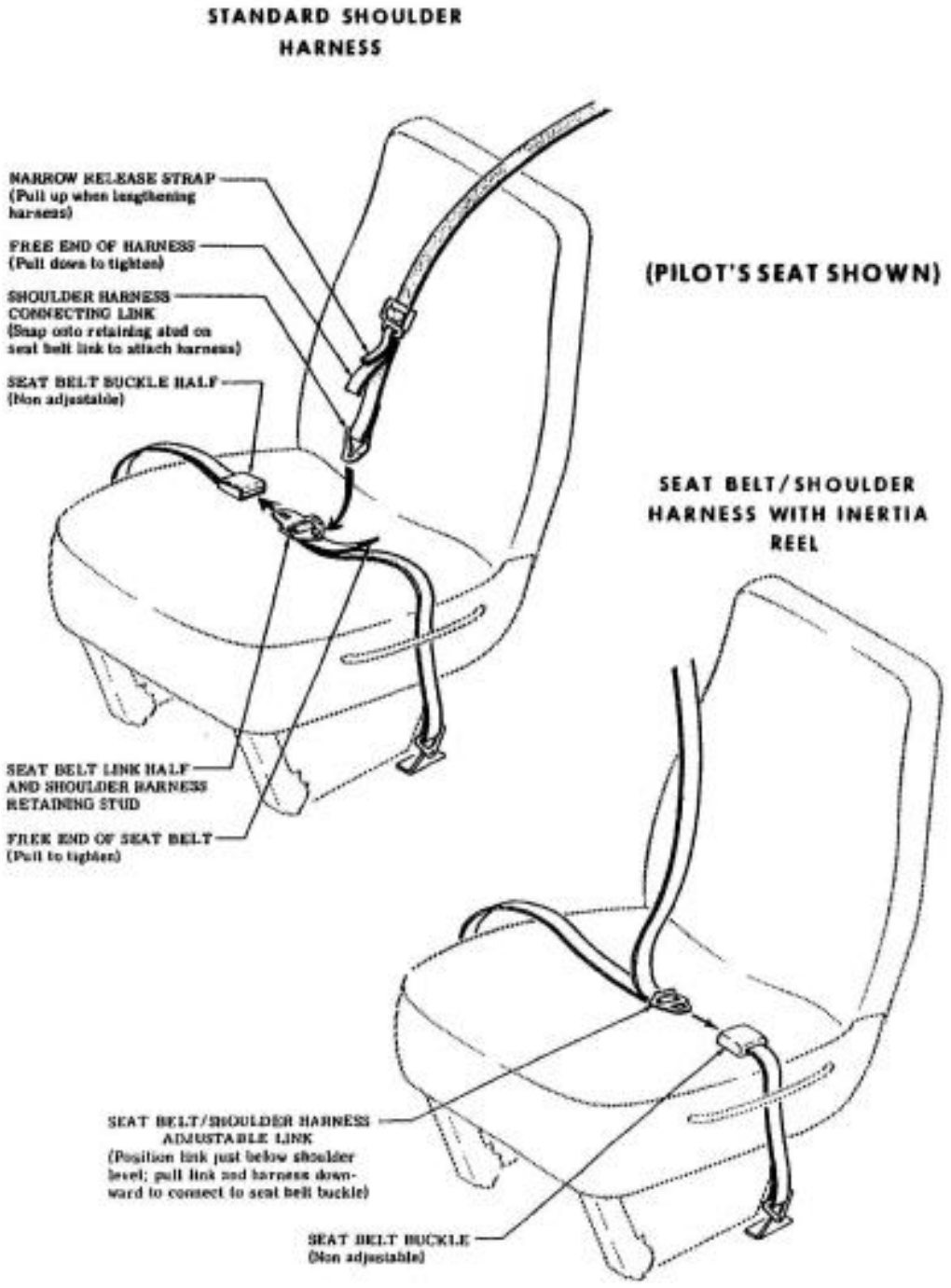

Figure 7-4. Seat Belts and Shoulder Harnesses

AEROCCIDENTE
Escuela de Aviación

and then lengthen the link half of the belt as needed by grasping the sides of the link and pulling against the belt. Insert and lock the belt link into the buckle. Tighten the belt to a snug fit. Seat belts for the rear seats are used in the same manner as the belts for the front seats. To release the seat belts, grasp the top of the buckle opposite the link and pull upward.

SHOULDER HARNESSES

Each front seat shoulder harness is attached to a rear doorpost above the window line and is stowed behind a stowage sheath above the cabin door. To stow the harness, fold it and place it behind the sheath. When rear seat shoulder harnesses are furnished, they are attached adjacent to the lower corners of the rear window. Each rear seat harness is stowed behind a stowage sheath above an aft side window.

To use a front or rear seat shoulder harness, fasten and adjust the seat belt first. Lengthen the harness as required by pulling on the connecting link on the end of the harness and the narrow release strap. Snap the connecting link firmly onto the retaining stud on the seat belt link half. Then adjust to length. A properly adjusted harness will permit the occupant to lean forward enough to sit completely erect, but prevent excessive forward movement and contact with objects during sudden deceleration. Also, the pilot will want the freedom to reach all controls easily.

Removing the shoulder harness is accomplished by pulling upward on the narrow release strap, and removing the harness connecting link from the stud on the seat belt link. In an emergency, the shoulder harness may be removed by releasing the seat belt first and allowing the harness, still attached to the link half of the seat belt, to drop to the side of the seat.

INTEGRATED SEAT BELT/SHOULDER HARNESSES WITH INERTIA REELS

Integrated seat belt/shoulder harnesses with inertia reels are available for the pilot and front seat passenger. The seat belt/shoulder harnesses extend from inertia reels located in the cabin ceiling to attach points inboard of the two front seats. A separate seat belt half and buckle is located outboard of the seats. Inertia reels allow complete freedom of body movement. However, in the event of a sudden deceleration, they will lock automatically to protect the occupants.

NOTE

The inertia reels are located for maximum shoulder harness comfort and safe retention of the seat occupants. This location requires that the shoulder harnesses cross near the top so that the right hand inertia reel serves the

AEROCCIDENTE
Escuela de Aviación

pilot and the left hand reel serves the front passenger. When fastening the harness, check to ensure the proper harness is being used.

To use the seat belt/shoulder harness, position the adjustable metal link on the harness at about shoulder level, pull the link and harness downward, and insert the link in the seat belt buckle. Adjust belt tension across the lap by pulling upward on the shoulder harness. Removal is accomplished by releasing the seat belt buckle, which will allow the inertia reel to pull the harness inboard of the seat.

ENTRANCE DOORS AND CABIN WINDOWS

Entry to, and exit from the airplane is accomplished through either of two entry doors, one on each side of the cabin at the front seat positions (refer to Section 6 for cabin and cabin door dimensions). The doors incorporate a recessed exterior door handle, a conventional interior door handle, a key-operated door lock (left door only), a door stop mechanism, and a ventilation window.

To open the doors from outside the airplane, utilize the recessed door handle near the aft edge of each door. Depress the forward end of the handle to rotate it out of its recess, and then pull outboard. To close or open the doors from inside the airplane, use the conventional door handle and arm rest. The inside door handle is a three-position handle having a placard at its base with the positions OPEN, CLOSE, and LOCK shown on it. The handle is spring-loaded to the CLOSE (up) position. When the door has been pulled shut and latched, lock it by rotating the door handle forward to the LOCK position. Both cabin doors should be locked prior to flight, and should not be opened intentionally during flight.

NOTE

Accidental opening of a cabin door in flight due to improper closing does not constitute a need to land the airplane. The best procedure is to set up the airplane in a trimmed condition at approximately 80 knots, momentarily shove the door outward slightly, and forcefully close and lock the door by normal procedures.

Exit from the airplane is accomplished by rotating the door handle full aft to the OPEN position and pushing the door open. To lock the airplane, lock the right cabin door with the inside handle, close the left cabin door, and using the ignition key, lock the door.

Both cabin doors are equipped with a crank-operated ventilation window in the lower front corner of the fixed door window. The crank, locat-

AEROCCIDENTE
Escuela de Aviación

ed below each ventilation window, opens the window when rotated forward and closes it when rotated aft. A placard, listing restrictions and usage, is located adjacent to the crank handle. The windows should not be opened at airspeeds above 105 knots, or when the alternate static source is in use. All other cabin windows are of the fixed type and cannot be opened.

CONTROL LOCKS

A control lock is provided to lock the ailerons and stabilator control surfaces in a neutral position and prevent damage to these systems by wind buffeting while the airplane is parked. The lock consists of a shaped steel rod with a red metal flag attached to it. The flag is labeled CONTROL LOCK, REMOVE BEFORE STARTING ENGINE. To install the control lock, align the hole on the right side of the pilot's control wheel shaft with the hole in the right side of the shaft collar on the instrument panel and insert the rod into the aligned holes. Proper installation of the lock will place the red flag over the ignition switch. In areas where high or gusty winds occur, a control surface lock should be installed over the vertical stabilizer and rudder. The control lock and any other type of locking device should be removed prior to starting the engine.

ENGINE

The airplane is powered by a horizontally-opposed, four-cylinder, overhead-valve, air-cooled, fuel injection engine with a wet sump oil system. The engine is a Lycoming Model IO-360-A1B6D and is rated at 200 horsepower at 2700 RPM. Major accessories mounted on the engine include a direct-drive starter and belt-driven alternator on the front of the engine, and dual magnetos, an engine-driven fuel pump, a full flow oil filter, a propeller governor, and a vacuum pump on the rear of the engine.

ENGINE CONTROLS

Engine power is controlled by a throttle located on the lower center portion of the instrument panel. The throttle operates in a conventional manner; in the full forward position, the throttle is open, and in the full aft position, it is closed. A friction lock, which is a round knurled disk, is located at the base of the throttle and is operated by rotating the lock clockwise to increase friction or counterclockwise to decrease it. The throttle linkage is designed to mechanically actuate a microswitch which is electrically connected to the landing gear warning horn system. The switch will cause the warning horn to sound anytime the throttle is retarded with the landing gear retracted, with less than approximately 12 inches of manifold pressure.

The mixture control, mounted above the right corner of the control

AEROCCIDENTE
Escuela de Aviación

pedestal, is a red knob with raised points around the circumference and is equipped with a lock button in the end of the knob. The rich position is full forward, and full aft is the idle cut-off position. For small adjustments, the control may be moved forward by rotating the knob clockwise, and aft by rotating the knob counterclockwise. For rapid or large adjustments, the knob may be moved forward or aft by depressing the lock button in the end of the control, and then positioning the control as desired.

ENGINE INSTRUMENTS

Engine operation is monitored by the following instruments: oil pressure gage, oil temperature gage, cylinder head temperature gage, tachometer, and manifold pressure/fuel flow indicator. An economy mixture (EGT) indicator is also available.

The oil pressure gage, located below and to the left of the pilot's control wheel shaft, is operated electrically and by oil pressure. A direct pressure oil line from the engine delivers oil at engine operating pressure to a transducer. The transducer then transmits the oil pressure electrically to the gage. Gage markings indicate that minimum idling pressure is 25 PSI (red line), the normal operating range is 60 to 90 PSI (green arc), and maximum pressure is 100 PSI (red line).

Oil temperature is indicated by a gage located below and to the right of the pilot's control wheel shaft. The gage is operated by an electrical-resistance type temperature sensor which receives power from the airplane electrical system. Oil temperature limitations are the normal operating range (green arc) which is 38°C (100°F) to 118°C (245°F), and the maximum (red line) which is 118°C (245°F).

The cylinder head temperature gage is located directly to the left of the pilot's control wheel shaft. An electrical-resistance type temperature sensor, which receives power from the airplane electrical system, operates the gage. Temperature limitations are the normal operating range (green arc) which is 93°C (200°F) to 246°C (475°F) and the maximum (red line) which is 246°C (475°F).

The engine-driven mechanical tachometer is located near the lower center portion of the instrument panel. The instrument is calibrated in increments of 100 RPM and indicates both engine and propeller speed. An hour meter below the center of the tachometer dial records elapsed engine time in hours and tenths. Instrument markings include a normal operating range (green arc) of 2100 to 2500 RPM and a maximum allowable (red line) of 2700 RPM. A yellow arc from 1400 to 1750 RPM is provided to caution the pilot against continuous engine operation at or below 10 inches Hg manifold pressure in the 1400 to 1750 RPM range.

AEROCCIDENTE
Escuela de Aviación

The manifold pressure gage is the left half of a dual-indicating instrument mounted to the left of the tachometer. The gage is direct reading and indicates induction air manifold pressure in inches of mercury. It has a normal operating range (green arc) of 15 to 25 inches of mercury.

The fuel flow indicator is the right half of a dual-indicating instrument mounted to the left of the tachometer. The indicator is a fuel pressure gage calibrated to indicate the approximate gallons per hour of fuel being metered to the engine. The normal operating range (green arc) is from 6 to 13 gallons per hour, and the maximum (red line) is 19 gallons per hour (10 PSI).

An economy mixture (EGT) indicator is available for the airplane and is located on the extreme lower left side of the instrument panel. A thermocouple probe in the right rear exhaust riser measures exhaust gas temperature and transmits it to the indicator. The indicator serves as a visual aid to the pilot in adjusting cruise mixture. Exhaust gas temperature varies with fuel-to-air ratio, power, and RPM. However, the difference between the peak EGT and the EGT at the cruise mixture setting is essentially constant and this provides a useful leaning aid. The indicator is equipped with a manually positioned peak EGT reference pointer.

NEW ENGINE BREAK-IN AND OPERATION

The engine underwent a run-in at the factory and is ready for the full range of use. It is, however, suggested that cruising be accomplished at 65% to 75% power until a total of 50 hours has accumulated or oil consumption has stabilized. This will ensure proper seating of the rings.

The airplane is delivered from the factory with corrosion preventive oil in the engine. If, during the first 25 hours, oil must be added, use only aviation grade straight mineral oil conforming to Specification No. MIL-L-6082.

ENGINE OIL SYSTEM

Oil for engine lubrication and propeller governor operation is supplied from a sump on the bottom of the engine. The capacity of the engine sump is eight quarts (one additional quart is contained in the engine oil filter). Oil is drawn from the sump through an oil suction strainer into the engine-driven oil pump. From the pump, oil is routed to a bypass valve. If the oil is cold, the bypass valve allows the oil to go directly from the pump to the oil filter. If the oil is hot, the bypass valve routes the oil out of the accessory housing and into a flexible hose leading to the oil cooler. Pressure oil from the cooler returns to the accessory housing where it enters he oil filter. The filtered oil then enters a pressure relief valve which

AEROCCIDENTE
Escuela de Aviación

regulates engine oil pressure by allowing excessive oil to return to the pump, while the balance of the pressure oil is circulated to various engine parts for lubrication. Residual oil is returned to the sump by gravity flow. Also, engine oil is routed to the propeller governor to provide control pressures to the propeller.

An oil filler cap/oil dipstick is located at the rear of the engine on the right side. The filler cap/dipstick is accessible through an access door in the engine cowling. The engine should not be operated on less than six quarts of oil. To minimize loss of oil through the breather, fill to seven quarts for normal flights of less than three hours. For extended flight, fill to eight quarts (dipstick indication only). For engine oil grade and specifications, refer to Section 8 of this handbook.

An oil quick-drain valve is available to replace the drain plug in the oil sump drain port, and provides quicker, cleaner draining of the engine oil. To drain the oil with this valve installed, slip a hose over the end of the valve and push upward on the end of the valve until it snaps into the open position. Spring clips will hold the valve open. After draining, use a suitable tool to snap the valve into the extended (closed) position and remove the drain hose.

IGNITION-STARTER SYSTEM

Engine ignition is provided by an engine-driven dual magneto, and two spark plugs in each cylinder. The right magneto fires the lower right and upper left spark plugs, and the left magneto fires the lower left and upper right spark plugs. Normal operation is conducted with both magnetos due to the more complete burning of the fuel-air mixture with dual ignition.

Ignition and starter operation is controlled by a rotary type switch located on the left switch and control panel. The switch is labeled clockwise, OFF, R, L, BOTH, and START. The engine should be operated on both magnetos (BOTH position) except for magneto checks. The R and L positions are for checking purposes and emergency use only. When the switch is rotated to the spring-loaded START position, (with the master switch in the ON position), the starter contactor is energized and the starter will crank the engine. When the switch is released, it will automatically return to the BOTH position.

AIR INDUCTION SYSTEM

The engine air induction system receives ram air through the left intake in the front of the engine cowling. Just inside the intake is an air filter which removes dust and other foreign matter from the induction air. Airflow passing through the filter enters an airbox at the front of the en-

AEROCCIDENTE
Escuela de Aviación

gine. The airbox has a spring-loaded alternate air door. If the air induction filter should become blocked, suction created by the engine will open the door and draw air from inside the lower cowl area. An open alternate air door will result in an approximate 5% power loss at full throttle After passing through the airbox, induction air enters a fuel/air control unit under the engine, and is then ducted to the engine cylinders through intake manifold tubes.

EXHAUST SYSTEM

Exhaust gas from each cylinder passes through riser assemblies to a muffler on each side of the engine. A crossover pipe carries exhaust gas from the left muffler to the tailpipe on the right muffler where it is vented overboard. Each muffler is constructed with a shroud around the outside which forms a heating chamber for cabin heater air.

FUEL INJECTION SYSTEM

The engine is equipped with a fuel injection system. The system is comprised of an engine-driven fuel pump, fuel/air control unit, fuel manifold, fuel flow indicator, and air-bleed type injector nozzles.

Fuel is delivered by the engine-driven fuel pump to the fuel/air control unit on the bottom of the engine. The fuel/air control unit correctly proportions the fuel flow to the induction air flow. After passing through the control unit, induction air is delivered to the cylinders through intake manifold tubes, and metered fuel is delivered to a fuel manifold. The fuel manifold, through spring tension on a diaphragm and valve, evenly distributes the fuel to an air-bleed type injector nozzle in the intake valve chamber of each cylinder. A pressure line is also attached to the fuel manifold, and is connected to a fuel flow indicator on the instrument panel.

COOLING SYSTEM

Ram air for engine cooling enters through two intake openings in the front of the engine cowling. The cooling air is directed around the cylinders and other areas of the engine by baffling, and is then exhausted through cowl flaps on the lower aft edge of the cowling. The cowl flaps are mechanically operated from the cabin by means of a cowl flap lever on the right side of the control pedestal. The pedestal is labeled OPEN, COWL FLAPS, CLOSED. During takeoff and high power operation, the cowl flap lever should be placed in the OPEN position for maximum cooling. This is accomplished by moving the lever to the right to clear a detent, then moving the lever up to the OPEN position. Anytime the lever is repositioned, it must first be moved to the right. While in cruise flight, cowl flaps should be adjusted to keep the cylinder head temperature

AEROCCIDENTE
Escuela de Aviación

at approximately three-fourths of the normal operating range (green arc). During extended let-downs, it may be necessary to completely close the cowl flaps by pushing the cowl flap lever down to the CLOSED position.

A winterization kit is available for the airplane. It consists of two baffles for the engine cowling air intake openings, a baffle for the oil cooler inlet scoop, and insulation for the crankcase breather line. This equipment should be installed for operations in temperatures consistently below -7°C (20°F). Once installed, crankcase breather line insulation is approved for permanent installation regardless of temperature.

PROPELLER

The airplane has an all-metal, two-bladed, constant-speed, governor-regulated propeller. A setting introduced into the governor with the propeller control establishes the propeller speed, and thus the engine speed to be maintained. The governor then controls flow of engine oil, boosted to high pressure by the governing pump, to or from a piston in the propeller hub. Oil pressure acting on the piston twists the blades toward high pitch (low RPM). When oil pressure to the piston in the propeller hub is relieved, centrifugal force, assisted by an internal spring, twists the blades toward low pitch (high RPM).

A control knob on the lower center portion of the instrument panel is used to set the propeller and control engine RPM as desired for various flight conditions. The knob is labeled PROP RPM, PUSH INCREASE. When the control knob is pushed in, blade pitch will decrease, giving a higher RPM. When the control knob is pulled out, the blade pitch increases, thereby decreasing RPM. The propeller control knob is equipped with a vernier feature which allows slow or fine RPM adjustments by rotating the knob clockwise to increase RPM, and counterclockwise to decrease it. To make rapid or large adjustments, depress the button on the end of the control knob and reposition the control as desired.

FUEL SYSTEM

The fuel system (see figure 7-5) consists of two vented integral fuel tanks (one in each wing), two fuel reservoir tanks, a fuel selector valve, auxiliary fuel pump, fuel strainer, engine-driven fuel pump, fuel/air control unit, fuel manifold, and fuel injection nozzles.

Fuel flows by gravity from the two integral tanks to two reservoir tanks, and from the reservoir tanks to a four-position selector valve labeled BOTH, LEFT, RIGHT, and OFF. With the selector valve in the

AEROCCIDENTE
Escuela de Aviación

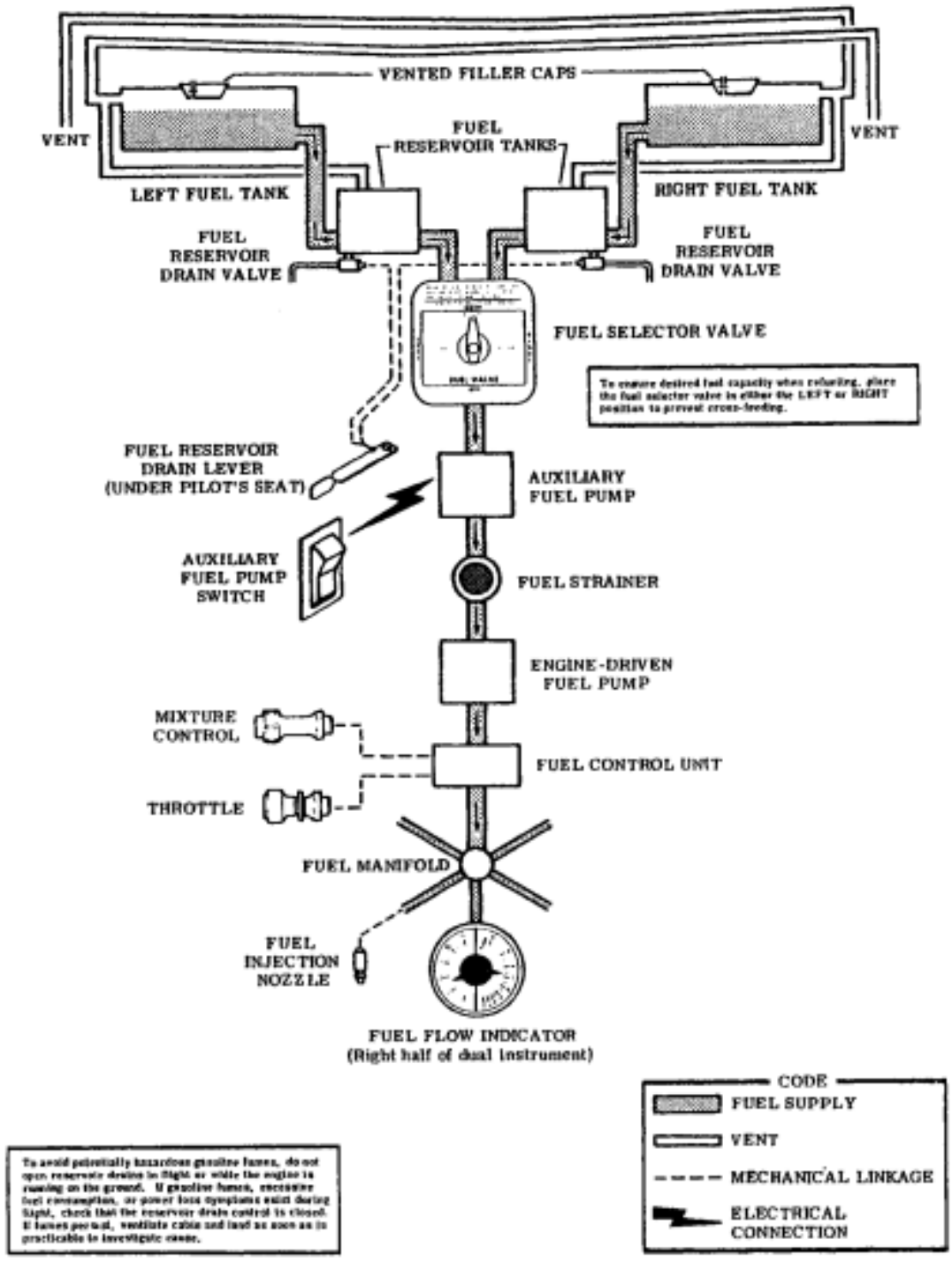

Figure 7-5. Fuel System

AEROCCIDENTE
Escuela de Aviación

FUEL QUANTITY DATA (U.S. GALLONS)			
TANKS	TOTAL USABLE FUEL ALL FLIGHT CONDITIONS	TOTAL UNUSABLE FUEL	TOTAL FUEL VOLUME
STANDARD 25.5 Gal. Each)	50	1	50

Figure 7-6. Fuel Quantity Data

BOTH position, fuel from both tanks flows through a bypass in the auxiliary fuel pump (when it is not in operation), and through a strainer to an engine-driven fuel pump. The engine-driven fuel pump delivers the fuel to the fuel/air control unit where it is metered and directed to a manifold which distributes it to each cylinder.

The airplane may be serviced to a reduced capacity to permit heavier cabin loadings. This is accomplished by utilizing the marker in the filler neck in each tank. The marker consists of a series of small holes at the bottom of the filler neck. When filled to this level, the tank contains 22 gallons (21.5 usable in all flight conditions).

Fuel system venting is essential to system operation. Complete blockage of the venting system will result in decreasing fuel flow and eventual engine stoppage. Venting is accomplished by vent lines, one from each fuel tank, which vent overboard at the wing tip opposite the tank. The fuel filler caps are equipped with vacuum operated vents which open, allowing air into the tanks, should the fuel tank vent lines become blocked. Vent lines connecting the fuel tank vent lines to the reservoir tanks prevent the reservoir tanks from air locking during refueling operations. An empty reservoir tank will result from completely exhausting the fuel in the respective wing tank.

Fuel quantity is measured by two float-type fuel quantity transmitters (one in each tank) and indicated by two electrically-operated fuel quantity indicators on the lower left portion of the instrument panel. An empty tank is indicated by a red line and the letter E. When an indicator shows an empty tank, approximately 0.5 gallon remains in the tank as unusable fuel. The indicators cannot be relied upon for accurate readings during skids, slips, or unusual attitudes. If both indicator pointers should rapidly move to a zero reading, check the cylinder head temperature gage, oil temperature gage, or oil pressure gage for readings. If these gages are not indicating, an electrical malfunction has occurred.

AEROCCIDENTE
Escuela de Aviación

The auxiliary fuel pump is used primarily for priming the engine before starting. Priming is accomplished through the regular injection system. If the auxiliary fuel pump switch is accidentally placed in the ON position for prolonged periods (with master switch turned on and mixture rich) with the engine stopped, the intake manifolds will be flooded.

The auxiliary fuel pump is also used for vapor suppression in hot weather. Normally, momentary use will be sufficient for vapor suppression; however, continuous operation is permissible if required. Turning on the auxiliary fuel pump with a normally operating engine pump will result in only a very minor enrichment of the mixture.

It is not necessary to have the auxiliary fuel pump operating during normal takeoff and landing, since gravity and the engine-driven pump will supply adequate fuel flow to the fuel injector unit.

In the event of failure of the engine-driven pump, use of the auxiliary fuel pump will provide sufficient fuel to maintain flight at maximum continuous power.

The fuel selector valve handle should be in the BOTH position for takeoff, landing, and power-on maneuvers that involve prolonged slips or skids. During prolonged climb or cruise with the fuel selector in BOTH position, unequal fuel flow from each tank may occur if the airplane is out of trim directionally (slip indicator ball not centered) or if the fuel tank caps are not sealing properly. The resulting heaviness can be alleviated gradually by turning the selector valve to the tank in the heavy wing.

To ensure a prompt engine restart after running a fuel tank dry, switch the fuel selector to the opposite tank at the first indication of fuel flow fluctuation or power loss. Then turn on the auxiliary fuel pump and advance the mixture control to full rich. After power and steady fuel flow are restored, turn off the auxiliary fuel pump and lean the mixture, if desirable. Prior to landing, the fuel selector should be returned to the BOTH position.

NOTE

With low fuel (1/16th tank or less) a prolonged powered steep descent (1000 feet or more) should be avoided with more than 10° flaps to prevent the possibility of fuel starvation resulting from uncovering the fuel tank outlets. If starvation should occur, leveling the nose and turning on the auxiliary fuel pump should restore engine power within 30 seconds.

AEROCCIDENTE
Escuela de Aviación

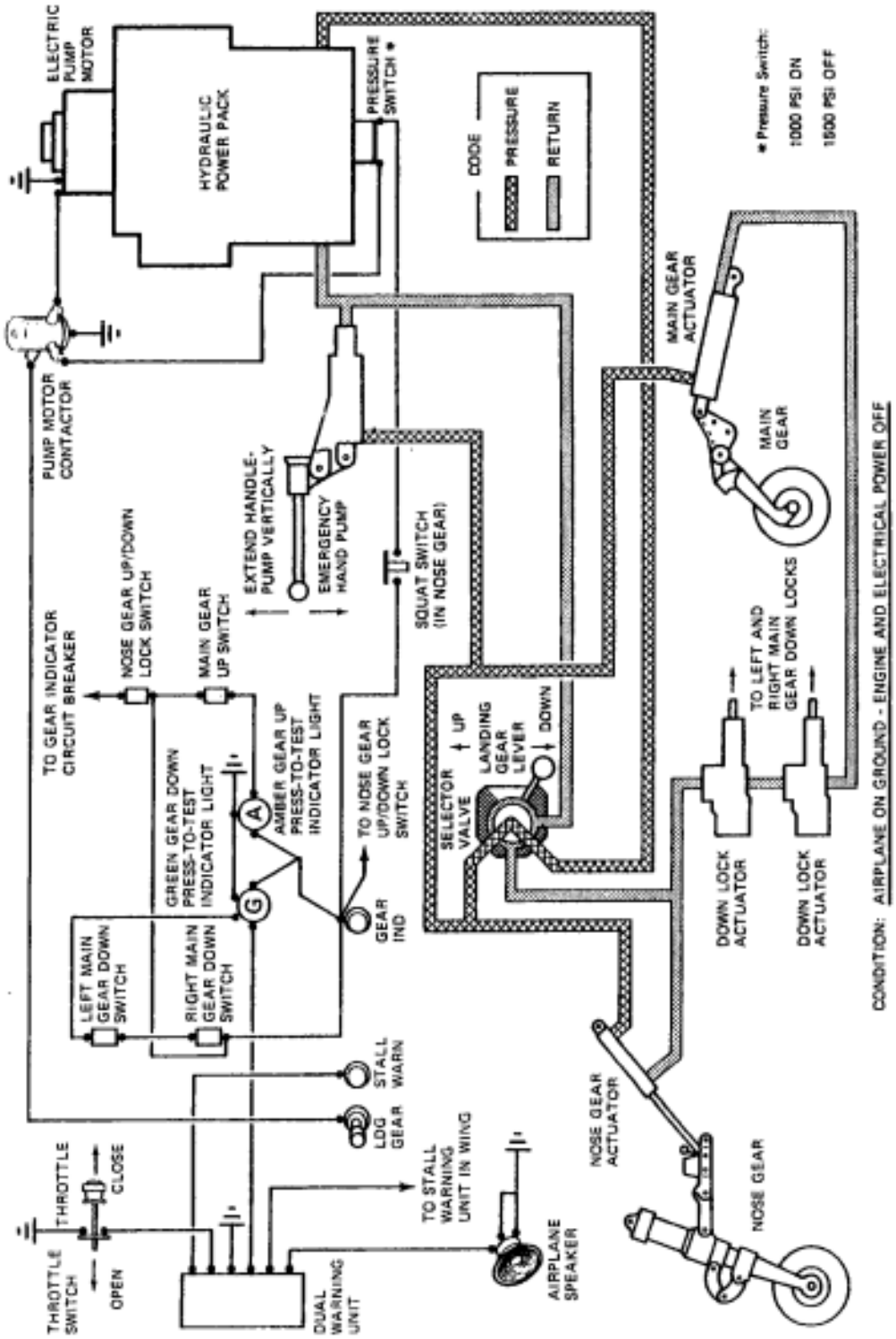

Figure 7-7. Hydraulic System

AEROCCIDENTE
Escuela de Aviación

The fuel system is equipped with drain valves to provide a means for the examination of fuel in the system for contamination and grade. The system should be examined before the first flight of every day and after each refueling, by using the sampler cup provided to drain fuel from the wing tank sumps, and by actuating the fuel reservoir drain lever under the pilot's seat to drain a quantity of fuel from the reservoir tanks. The fuel tanks should be filled after each flight to prevent condensation.

HYDRAULIC SYSTEM

Hydraulic power (see figure 7-7) is supplied by an electrically-driven hydraulic power pack located aft of the rear baggage compartment wall. The power pack's only function is to supply hydraulic power for operation of the retractable landing gear. This is accomplished by applying hydraulic pressure to actuator cylinders which extend or retract the gear. The electrical portion of the power pack is protected by a 30-amp push-pull type circuit breaker switch.

The hydraulic power pack is turned on by a hydraulic pressure switch on the bottom of the power pack when the landing gear lever is placed in either the UP or DN position. When the lever is placed in the UP or DN position, it mechanically rotates a selector valve which applies pressure in the direction selected. As soon as the landing gear reaches the selected position, a series of electrical switches will illuminate one of two indicator lights on the instrument panel to show gear position and completion of the cycle. After indicator light illumination, hydraulic pressure will continue to build until the power pack pressure switch turns the power pack off.

The hydraulic system includes an emergency hand pump to permit manual extension of the landing gear in the event of hydraulic power pack failure. The hand pump is located beneath a hinged cover on the cabin floor between the front seats.

During normal operations, the landing gear should require from 12 to 13 seconds to fully extend or retract. For malfunctions of the hydraulic and landing gear systems, refer to Section 3 of this handbook.

BRAKE SYSTEM

The airplane has a single-disc, hydraulically-actuated brake on each main landing gear wheel. Each brake is connected, by a hydraulic line, to a master cylinder attached to each of the pilot's rudder pedals. The

AEROCCIDENTE
Escuela de Aviación

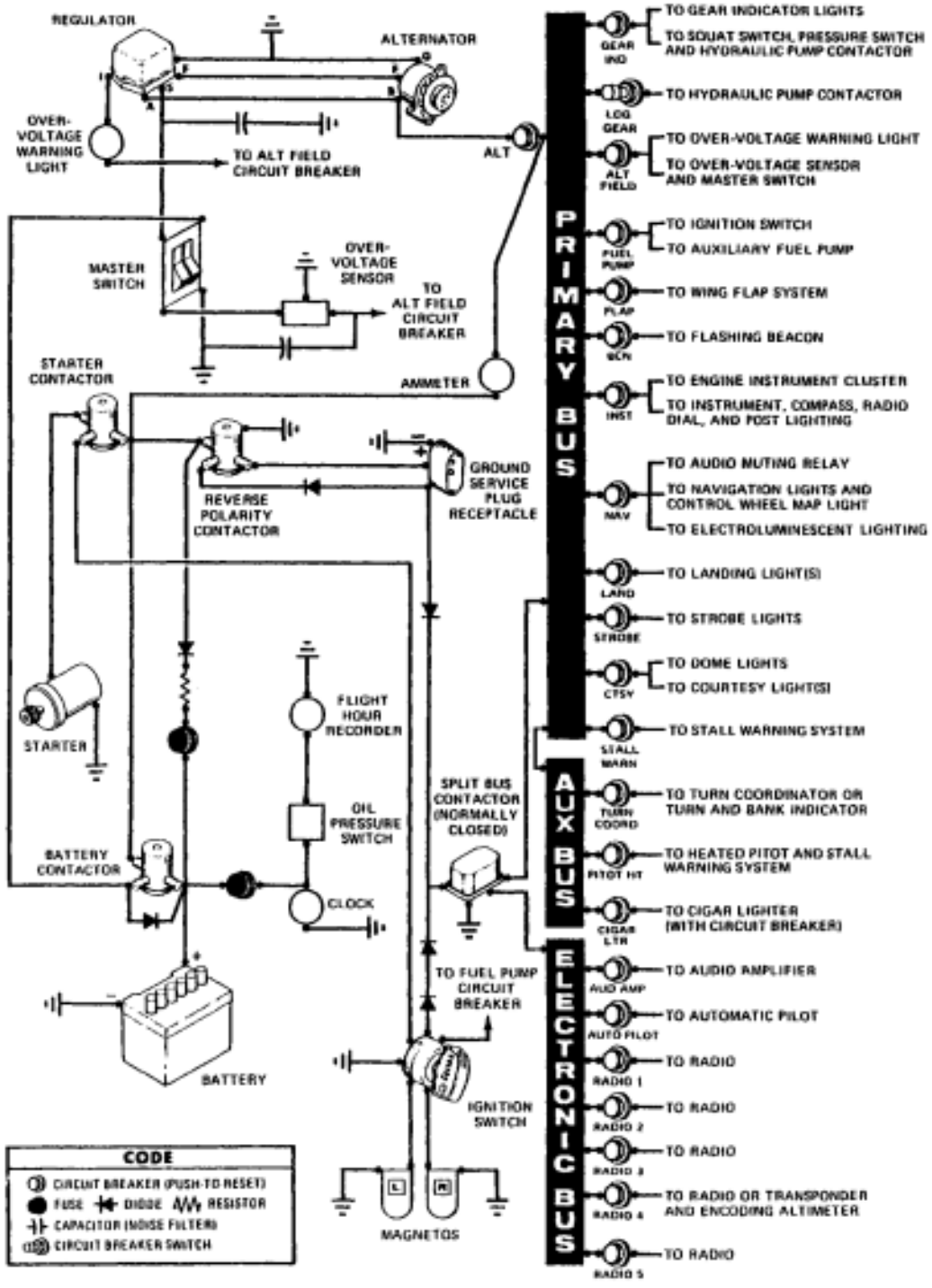

Figure 7-8. Electrical System

AEROCCIDENTE
Escuela de Aviación

brakes are operated by applying pressure to the top of either the left (pilot's) or right (copilot's) set of rudder pedals, which are interconnected. When the airplane is parked, both main wheel brakes may be set by utilizing the parking brake which is operated by a handle under the left side of the instrument panel.

For maximum brake life, keep the brake system properly maintained, and minimize brake usage during taxi operations and landings.

Some of the symptoms of impending brake failure are: gradual decrease in braking action after brake application, noisy or dragging brakes, soft or spongy pedals, short pedal travel and hard pedal, and excessive travel and weak braking action. If any of these symptoms appear, the brake system is in need of immediate attention. If, during taxi or landing roll, braking action decreases, let up on the pedals and then re-apply the brakes with heavy pressure. If the brakes become spongy or pedal travel increases, pumping the pedals should build braking pressure. If one brake becomes weak or fails, use the other brake sparingly while using opposite rudder, as required, to offset the good brake.

ELECTRICAL SYSTEM

Electrical energy (see figure 7-8) is supplied by a 14-volt, direct-current system powered by an engine-driven, 60-amp alternator. The 12-volt, 25-amp hour battery is located aft of the rear cabin wall. Power is supplied to all electrical circuits through a split bus bar, one side containing electronic system circuits and the other side having general electrical system circuits. Both sides of the bus are on at all times except when either an external power source is connected or the starter switch is turned on; then a power contactor is automatically activated to open the circuit to the electronic bus. Isolating the electronic circuits in this manner prevents harmful transient voltages from damaging the transistors in the electronic equipment.

MASTER SWITCH

The master switch is a split-rocker type switch labeled MASTER, and is ON in the up position and OFF in the down position. The right half of the switch, labeled BAT, controls all electrical power to the airplane. The left half, labeled ALT, controls the alternator.

Normally, both sides of the master switch should be used simulta-

AEROCCIDENTE
Escuela de Aviación

neously; however, the BAT side of the switch could be turned ON separately to check equipment while on the ground. The ALT side of the switch, when placed in the OFF position, removes the alternator from the electrical system. With this switch in the OFF position, the entire electrical load is placed on the battery. Continued operation with the alternator switch in the OFF position will reduce battery power low enough to open the battery contactor, remove power from the alternator field, and prevent alternator restart.

AMMETER

The ammeter indicates the flow of current, in amperes, from the alternator to the battery or from the battery to the airplane electrical system. When the engine is operating and the master switch is turned on, the ammeter indicates the charging rate applied to the battery. In the event the alternator is not functioning or the electrical load exceeds the output of the alternator, the ammeter indicates the battery discharge rate.

OVER-VOLTAGE SENSOR AND WARNING LIGHT

The airplane is equipped with an automatic over-voltage protection system consisting of an over-voltage sensor behind the instrument panel and a red warning light, labeled HIGH VOLTAGE, near the ammeter.

In the event an over-voltage condition occurs, the over-voltage sensor automatically removes alternator field current and shuts down the alternator. The red warning light will then turn on, indicating to the pilot that the alternator is not operating and the battery is supplying all electrical power.

The over-voltage sensor may be reset by turning the master switch off and back on again. If the warning light does not illuminate, normal alternator charging has resumed; however, if the light does illuminate again, a malfunction has occurred, and the flight should be terminated as soon as practical.

The warning light may be tested by momentarily turning off the ALT portion of the master switch and leaving the BAT portion turned on.

CIRCUIT BREAKERS AND FUSES

Most of the electrical circuits in the airplane are protected by "push-

AEROCCIDENTE
Escuela de Aviación

to-reset" circuit breakers mounted on the right side of the instrument panel. Exceptions to this are the battery contactor closing (external power) circuit, clock and flight hour recorder circuits which have fuses mounted near the battery. The landing gear circuit is protected by a push-pull type circuit breaker on the right side of the instrument panel, and the cigar lighter has a manually reset type circuit breaker mounted on the back of the lighter socket in addition to a circuit breaker on the panel.

GROUND SERVICE PLUG RECEPTACLE

A ground service plug receptacle may be installed to permit the use of an external power source for cold weather starting and during lengthy maintenance work on the airplane electrical system (with the exception of electronic equipment). The receptacle is located under a cover plate, aft of the baggage door on the left side of the tailcone.

NOTE

Electrical power for the airplane electrical circuits is provided through a split bus bar having all electronic circuits on one side of the bus and other electrical circuits on the other side of the bus. When an external power source is connected, a contactor automatically opens the circuit to the electronic portion of the split bus bar as a protection against damage to the transistors in the electronic equipment by transient voltages from the power source. Therefore, the external power source can not be used as a source of power when checking electronic components.

Just before connecting an external power source (generator type or battery cart), the master switch should be turned on.

The ground service plug receptacle circuit incorporates a polarity reversal protection. Power from the external power source will flow only if the ground service plug is correctly connected to the airplane. If the plug is accidentally connected backwards, no power will flow to the electrical system, thereby preventing any damage to electrical equipment.

The battery and external power circuits have been designed to completely eliminate the need to "jumper" across the battery contactor to close it for charging a completely "dead" battery. A special fused circuit in the external power system supplies the needed "jumper" across the contacts so that with a "dead" battery and an external power source applied, turning on the master switch will close the battery contactor.

AEROCCIDENTE
Escuela de Aviación

LIGHTING SYSTEMS

EXTERIOR LIGHTING

Conventional navigation lights are located on the wing tips and top of the rudder. Landing and taxi lights are installed in the nose cap, and a flashing beacon is mounted on top of the vertical fin. Additional lighting is available and includes a strobe light on each wing tip and two courtesy lights, one under each wing, just outboard of the cabin door. The courtesy lights are operated by a switch located on the left rear door post. All exterior lights, except the courtesy lights, are controlled by rocker type switches on the left switch and control panel. The switches are ON in the up position and OFF in the down position.

The flashing beacon should not be used when flying through clouds or overcast; the flashing light reflected from water droplets or particles in the atmosphere, particularly at night, can produce vertigo and loss of orientation.

The two high intensity strobe lights will enhance anti-collision protection. However, the lights should be turned off when taxiing in the vicinity of other aircraft, or during night flight through clouds, fog or haze.

INTERIOR LIGHTING

Instrument and control panel lighting is provided by flood and integral lighting, with post and electroluminescent lighting also available. All light intensity is rheostat controlled. The lighting intensity in airplanes not equipped with electroluminescent lighting is controlled by two rheostats and control knobs labeled PANEL LIGHTS and ENG-RADIO LIGHTS on the left switch and control panel. If electroluminescent lighting is installed, the rheostat and control knob labeled PANEL LIGHTS is replaced with a dual rheostat and two concentric control knobs. The concentric control knobs remain labeled PANEL LIGHTS. If post lighting is installed, the overhead console will contain a slide-type switch on the left side of the console. The switch is labeled PANEL LTS and its positions are labeled FLOOD, BOTH, and POST. The POST and FLOOD positions will select post or flood lighting respectively, and the BOTH position will select a combination of post and flood lighting.

Switches and controls on the lower part of the instrument panel may be lighted by electroluminescent panels which do not require light bulbs for illumination. To utilize this lighting, turn on the NAV light switch and adjust light intensity with the small (inner) control knob of the concentric control knobs labeled PANEL LIGHTS. Electroluminescent lighting is not affected by the selection of post or flood lighting.

AEROCCIDENTE
Escuela de Aviación

Instrument and control panel flood lighting consists of four red flood lights on the underside of the anti-glare shield, and a single red flood light in the forward part of the overhead console. To use flood lighting, place the PANEL LTS selector switch in the FLOOD position and adjust light intensity with the PANEL LIGHTS rheostat control knob.

The instrument panel may be equipped with post lights which are mounted at the edge of each instrument or control and provide direct lighting. The lights are operated by placing the PANEL LTS selector switch in the POST position and adjusting light intensity with the PANEL LIGHTS rheostat control knob. By placing the PANEL LTS selector switch in the BOTH position, the post lights can be used in combination with the standard flood lighting.

The engine instrument cluster, radio equipment, and magnetic compass have integral lighting and operate independently of post or flood lighting. The light intensity of instrument cluster and radio lighting is controlled by the ENG-RADIO LIGHTS rheostat control knob. Magnetic compass lighting intensity is controlled by the PANEL LIGHTS rheostat control knob.

A cabin dome light is located in the aft part of the overhead console, and is operated by a switch adjacent to the light. To turn the light on, move the switch to the right.

The instrument panel control pedestal may be equipped with a courtesy light, mounted at its base, to illuminate the forward cabin floor area. This light is controlled by the courtesy light switch on the left rear door post.

A control wheel map light is available and is mounted on the bottom of the pilot's control wheel. The light illuminates the lower portion of the cabin just forward of the pilot and is helpful when checking maps and other flight data during night operations. To operate the light, first turn on the NAV light switch; then adjust the map light's intensity with the knurled disk type rheostat control located at the bottom of the control wheel.

The most probable cause of a light failure is a burned out bulb; however, in the event any of the lighting systems fail to illuminate when turned on, check the appropriate circuit breaker. If the circuit breaker has opened (white button popped out), and there is no obvious indication of a short circuit (smoke or odor), turn off the light switch of the affected lights, reset the breaker, and turn the switch on again. If the breaker opens again, do not reset it.

AEROCCIDENTE
Escuela de Aviación

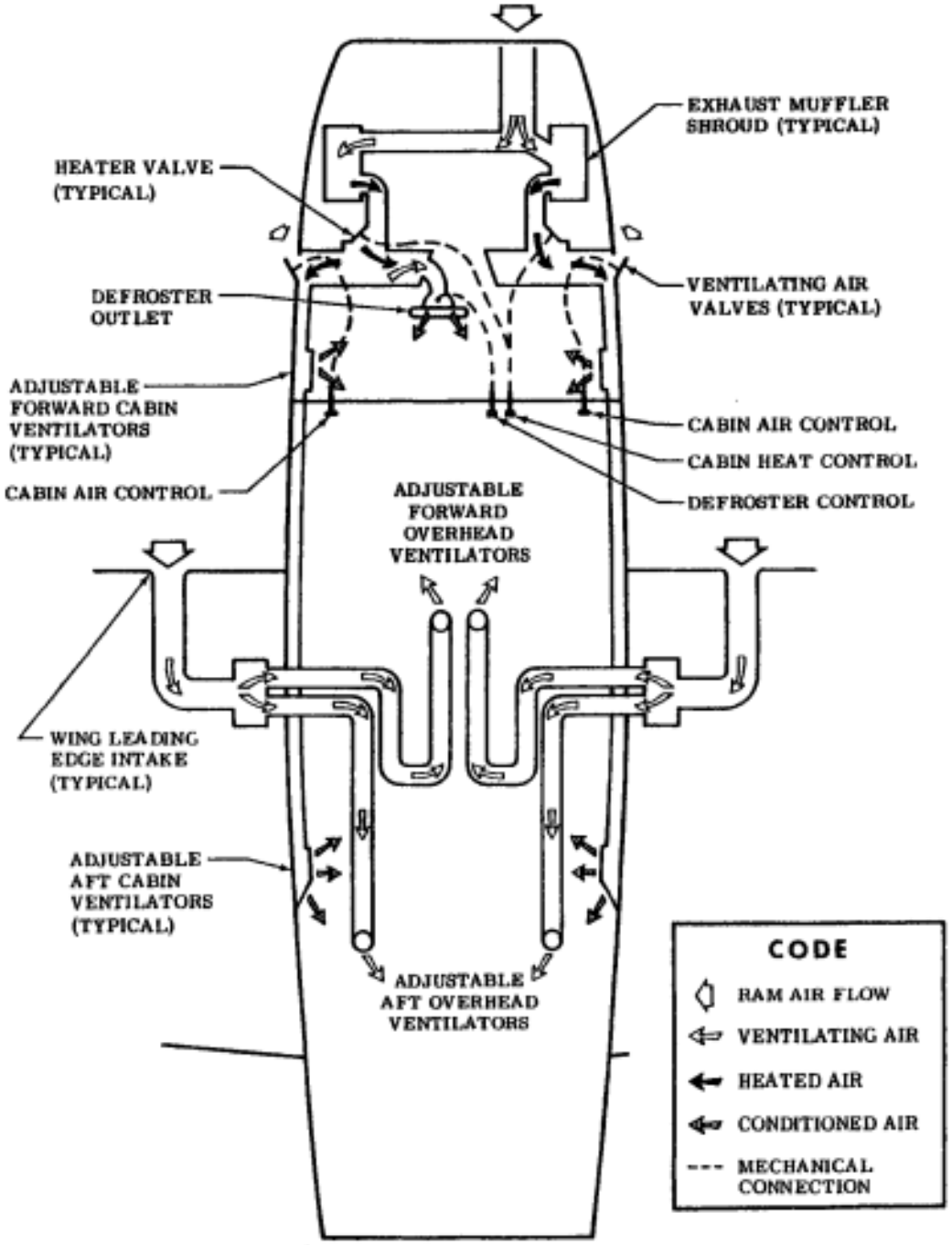

Figure 7-9. Cabin Heating, Ventilating, and Defrosting System

AEROCCIDENTE
Escuela de Aviación

CABIN HEATING, VENTILATING AND DEFROSTING SYSTEM

The temperature and volume of airflow into the cabin can be regulated to any degree desired by adjustment of a single CABIN HEAT knob and two CABIN AIR knobs (see figure 7-9). When partial cabin heat is desired, blending warm and cold air will result in improved ventilation and heat distribution throughout the cabin.

Front cabin heat and ventilating air from the main heat and ventilating system is routed through two manifolds located forward of the rudder pedals to directionally-adjustable, on-off ventilators on the front cabin sidewalls. Rear cabin heat and air is supplied by ducts from both front cabin ventilators, one extending down each side of the cabin to the forward doorpost, then along the lower edge of the cabin door to an outlet near the aft edge of the door. Airflow from each outlet may be directed through either of two louvered openings by rotating a knob on top of the outlet. For maximum rear cabin heating, close both front cabin ventilators.

Windshield defrost air is supplied from the left cabin manifold; therefore, the temperature of the defrosting air is the same as heated cabin air. A push-pull control knob labeled DEFROSTER regulates the volume of air to the windshield. Pull the knob out as necessary for defrosting.

Additional cabin ventilation can be obtained from two separately adjustable ventilators above the pilot and front passenger. Two additional ventilators may be installed in the rear cabin ceiling. While on the ground, or at speeds up to 105 knots, ventilation airflow can be increased through an openable vent window in each cabin door.

PITOT-STATIC SYSTEM AND INSTRUMENTS

The pitot-static system supplies ram air pressure to the airspeed indicator and static pressure to the airspeed indicator, rate-of-climb indicator and altimeter. The system is composed of a pitot tube mounted on the lower surface of the left wing, two external static ports, one on each side of the lower forward portion of the fuselage, and the associated plumbing necessary to connect the instruments to the sources.

The airplane may also be equipped with a pitot heat system. The system consists of a heating element in the pitot tube, a rocker-type switch labeled PITOT HEAT on the lower left side of the instrument panel, a 10-amp circuit breaker on the lower right side of the instrument panel, and associated wiring. When the pitot heat switch is turned on, the element in

AEROCCIDENTE
Escuela de Aviación

the pitot tube is heated electrically to maintain proper operation in possible icing conditions. Pitot heat should be used only as required.

A static pressure alternate source valve is installed in the left side of the instrument panel for use when the external static source is malfunctioning. This valve supplies static pressure from inside the rear fuselage instead of the external static ports. An external condensate drain, located in the alternate source line under the floorboard, is provided for periodic draining of any moisture accumulation.

If erroneous instrument readings are suspected due to water or ice in the pressure lines going to the standard external static pressure source, the alternate static source valve should be pulled on.

Pressures within the rear fuselage will vary with open cabin ventilators and vent windows. Refer to Sections 3 and 5 for the effect of varying cabin pressures on airspeed and altimeter readings.

AIRSPEED INDICATOR

The airspeed indicator is calibrated in knots and miles per hour. Limitation and range markings include the white arc (50 to 95 knots), green arc (59 to 142 knots), yellow arc (142 to 174 knots), and a red line (174 knots).

If a true airspeed indicator is installed, it is equipped with a rotatable ring which works in conjunction with the airpseed indicator dial in a manner similar to the operation of a flight computer. To operate the indicator, first rotate the ring until pressure altitude is aligned with outside air temperature in degrees Fahrenheit. Pressure altitude should not be confused with indicated altitude. To obtain pressure altitude, momentarily set the barometric scale on the altimeter to 29.92 and read pressure altitude on the altimeter. Be sure to return the altimeter barometric scale to the original barometric setting after pressure altitude has been obtained. Having set the ring to correct for altitude and temperature, then read the airspeed shown on the rotatable ring by the indicator pointer. For best accuracy, this indication should be corrected to calibrated airspeed by referring to the Airspeed Calibration chart in Section 5. Knowing the calibrated airspeed, read true airspeed on the ring opposite the calibrated airspeed.

RATE-OF-CLIMB INDICATOR

The rate-of-climb indicator depicts airplane rate of climb or descent in feet per minute. The pointer is actuated by an atmospheric pressure

AEROCCIDENTE
Escuela de Aviación

change supplied by the static source.

ALTIMETER

Airplane altitude is depicted by a barometric type altimeter. A knob near the lower left portion of the indicator provides adjustment of the instrument's barometric scale to the proper barometric pressure reading.

VACUUM SYSTEM AND INSTRUMENTS

An engine-driven vacuum system (see figure 7-10) is available and provides the suction necessary to operate the attitude indicator and directional indicator. The system consists of a vacuum pump mounted on the engine, a vacuum relief valve and vacuum system air filter on the aft side of the firewall below the instrument panel, and instruments (including a suction gage) on the left side of the instrument panel.

ATTITUDE INDICATOR

An attitude indicator is available and gives a visual indication of flight attitude. Bank attitude is presented by a pointer at the top of the indicator relative to the bank scale which is marked in increments of 10°, 20°, 30°, 60°, and 90° either side of the center mark. Pitch attitude is presented by a miniature airplane in relation to the horizon bar. A knob at the bottom of the instrument is provided for in-flight adjustment of the miniature airplane to the horizon bar for a more accurate flight attitude indication.

DIRECTIONAL INDICATOR

A directional indicator is available and displays airplane heading on a compass card in relation to a fixed simulated airplane image and index. The directional indicator will precess slightly over a period of time. Therefore, the compass card should be set in accordance with the magnetic compass just prior to takeoff, and occasionally re-adjusted on extended flights. A knob on the lower left edge of the instrument is used to adjust the compass card to correct for any precession.

SUCTION GAGE

A suction gage is located at the upper left edge of the instrument panel when the airplane is equipped with a vacuum system. Suction available for operation of the attitude indicator and directional indicator is shown by this gage, which is calibrated in inches of mercury. The desired suction range is 4.6 to 5.4 inches of mercury. A suction reading below this range may

AEROCCIDENTE
Escuela de Aviación

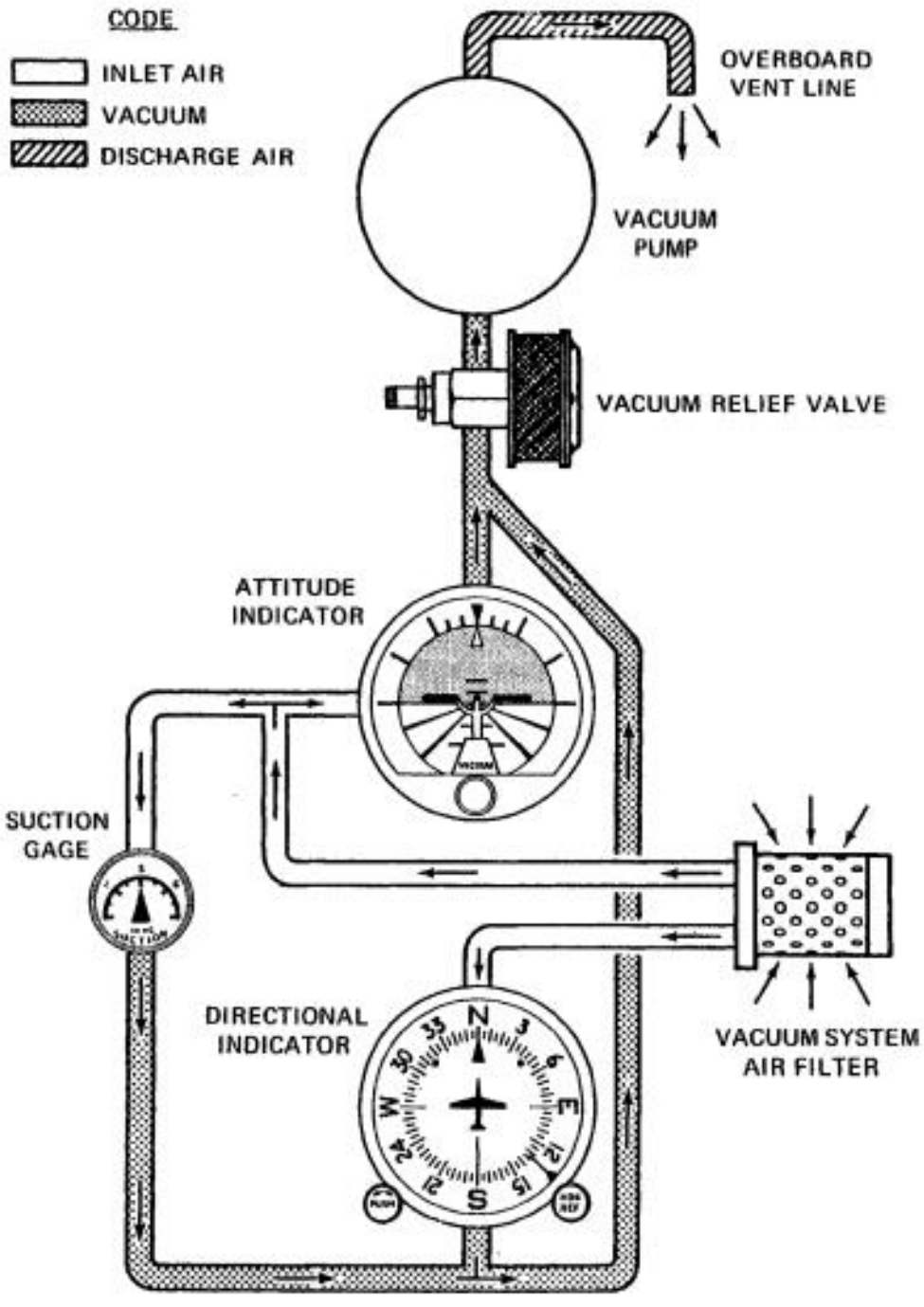

Figure 7-10. Vacuum System

AEROCCIDENTE
Escuela de Aviación

indicate a system malfunction or improper adjustment, and in this case, the indicators should not be considered reliable.

STALL WARNING SYSTEM

The airplane is equipped with a vane-type stall warning unit in the leading edge of the left wing. The unit is electrically connected to a dual warning unit near the airplane speaker in the overhead console. The vane in the wing unit senses the change in airflow over the wing, and operates the dual warning unit, which produces a continuous tone over the airplane speaker, between 5 and 10 knots above the stall in all configurations.

If the airplane has a heated stall warning system, the vane-type unit in the wing is equipped with a heating element. The heated stall warning system is operated by the PITOT HEAT switch, and is protected by the PITOT HEAT circuit breaker.

The stall warning system should be checked during the pre-flight inspection by momentarily turning on the master switch and actuating the vane in the wing. The system is operational if a continuous tone is heard on the airplane speaker as the vane is pushed upward.

AVIONICS SUPPORT EQUIPMENT

The airplane may, at the owner's discretion, be equipped with various types of avionics support equipment such as an audio control panel, microphone-headsets, and static dischargers. The following paragraphs discuss these items.

AUDIO CONTROL PANEL

Operation of radio equipment is covered in Section 9 of this handbook. When one or more radios are installed, a transmitter/audio switching system is provided (see figure 7-11). The operation of this switching system is described in the following paragraphs.

TRANSMITTER SELECTOR SWITCH

A rotary type transmitter selector switch, labeled XMTR SEL, is provided to connect the microphone to the transmitter the pilot desires

AEROCCIDENTE
Escuela de Aviación

AUTOMATIC AUDIO SELECTION

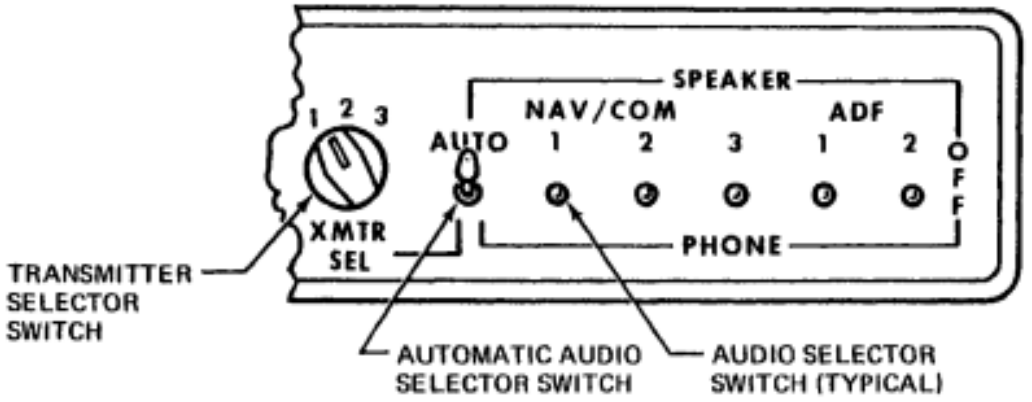

As illustrated, the number 1 transmitter is selected, the AUTO selector switch is in the SPEAKER position, and the NAV/COM 1, 2 and 3 and ADF 1 and 2 audio selector switches are in the OFF position. With the switches set as shown, the pilot will transmit on the number 1 transmitter and hear the number 1 NAV/COM receiver through the airplane speaker.

INDIVIDUAL AUDIO SELECTION

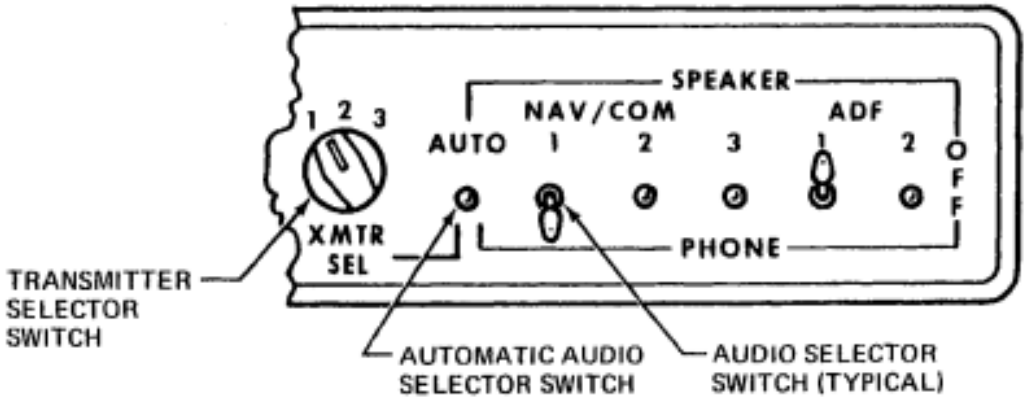

As illustrated, the number 1 transmitter is selected, the AUTO selector switch is in the OFF position, the number 1 NAV/COM receiver is in the PHONE position, and the number 1 ADF is in the SPEAKER position. With the switches set as shown, the pilot will transmit on the number 1 transmitter and hear the number 1 NAV/COM receiver on a headset, while the passengers are listening to the ADF audio through the airplane speaker. If another audio selector switch is placed in either the PHONE or SPEAKER position, it will be heard simultaneously with either the number 1 NAV/COM or number 1 ADF respectively.

Figure 7-11. Audio Control Panel

AEROCCIDENTE
Escuela de Aviación

to use. To select a transmitter, rotate the switch to the number corresponding to that transmitter. The numbers 1, 2 and 3 above the switch correspond to the top, second and third transceivers in the avionics stack.

An audio amplifier is required for speaker operation, and is automatically selected, along with the transmitter, by the transmitter selector switch. As an example, if the number 1 transmitter is selected, the audio amplifier in the associated NAV/COM receiver is also selected, and functions as the amplifier for ALL speaker audio. In the event the audio amplifier in use fails. as evidenced by loss of all speaker audio, select another transmitter is should re-establish speaker audio. Headset audio is not affected udio amplifier operation.

AUTOMATIC AUDIO SELECTOR SWITCH

A toggle switch, labeled AUTO, can be used to automatically match the appropriate NAV/COM receiver audio to the transmitter being selected. To utilize this automatic feature, leave all NAV/COM receiver switches in the OFF (center) position, and place the AUTO selector switch in either the SPEAKER or PHONE position, as desired. Once the AUTO selector switch is positioned, the pilot may then select any transmitter and its associated NAV/COM receiver audio simultaneously with the transmitter selector switch. If automatic audio selection is not desired, the AUTO selector switch should be placed in the OFF (center) position.

AUDIO SELECTOR SWITCHES

The audio selector switches, labeled NAV/COM 1, 2 and 3 and ADF 1 and 2, allow the pilot to initially pre-tune all NAV/COM and ADF receivers, and then individually select and listen to any receiver or combination of receivers. To listen to a specific receiver, first check that the AUTO selector switch is in the OFF (center) position, then place the audio selector switch corresponding to that receiver in either the SPEAKER (up) or PHONE (down) position. To turn off the audio of the selected receiver, place that switch in the OFF (center) position. If desired, the audio selector switches can be positioned to permit the pilot to listen to one receiver on a headset while the passengers listen to another receiver on the airplane speaker.

The ADF 1 and 2 switches may be used anytime ADF audio is desired. If the pilot wants only ADF audio, for station identification or other reasons, the AUTO selector switch (if in use) and all other audio selector switches should be in the OFF position. If simultaneous ADF and NAV/COM audio is acceptable to the pilot, no change in the existing switch positions is required. Place the ADF 1 or 2 switch in either the SPEAKER or PHONE position and adjust radio volume as desired.

AEROCCIDENTE
Escuela de Aviación

NOTE

If the NAV/COM audio selector switch corresponding to the selected transmitter is in the PHONE position with the AUTO selector switch in the SPEAKER position, all audio selector switches placed in the PHONE position will automatically be connected to both the airplane speaker and any headsets in use.

MICROPHONE-HEADSET

The microphone-headset combination consists of the microphone and headset combined in a single unit and a microphone keying switch located on the left side of the pilot's control wheel. The microphone-headset permits the pilot to conduct radio communications without interrupting other control operations to handle a hand-held microphone. Also, passengers need not listen to all communications. The microphone and headset jacks are located near the lower left corner of the instrument panel.

STATIC DISCHARGERS

If frequent IFR flights are planned, installation of wick-type static dischargers is recommended to improve radio communications during flight through dust or various forms of precipitation (rain, freezing rain, snow or ice crystals). Under these conditions, the build-up and discharge of static electricity from the trailing edges of the wings, rudder, stabilator, propeller tips, and radio antennas can result in loss of usable radio signals on all communications and navigation radio equipment. Usually the ADF is first to be affected and VHF communication equipment is the last to be affected.

Installation of static dischargers reduces interference from precipitation static, but it is possible to encounter severe precipitation static conditions which might cause the loss of radio signals, even with static dischargers installed. Whenever possible, avoid known severe precipitation areas to prevent loss of dependable radio signals. If avoidance is impractical, minimize airspeed and anticipate temporary loss of radio signals while in these areas.

AEROCCIDENTE
Escuela de Aviación